


# Temperature and pressure

Gesa

www.termometros.com info@termometros.com 946 76 63 64

# Gesa Termómetros, S.L.

Our company is now serving 50 years of presence in the European market

Since our very beginning we devoted ourselves to the manufacture and commercialisation of precision instruments. We fabricate a wide range of standard instruments as well as under specification, but always according to standards such as DIN, ASTM, BS…

In the course of this time we have gained great experience on our customer's necessities both general and specific. Our products are effectively used in many areas comprehending:

- Shipyards and fishing industry
- Heating and refrigeration
- Chemical and petrochemical facilities
- Food and catering
- Irrigation and drainage

In this new version of our website will appreciate a more effective presentation of all our activities as well as easier to compose budgets queries or requests.

We manage more than 10,000 different references, many of which are in stock, so the usual delivery time is two or three days. For other fabrications and depending on the amount, the average time is usually about two weeks.

Our customer support includes technical advice necessary for the correct choice of instrument best suited to their needs.

We have the necessary metrology equipment for the issuance of certificates of calibration of all our instruments, both in temperature and pressure. All internal standards used in the manufacture and issuance of certificates of calibration are traceable to ENAC (National Accreditation).



# PRESIÓN
# PRESSION
# PRESSURE

# Pressure gauge with plastic case

**M 01 01**

Designed to monitor pressure in systems not subjected to vibrations. Suitable for all gaseous and liquid media that will not obstruct the pressure system or attack copper alloy parts.
Especially designed for pneumatic circuits, filters, pressure regulators...
Manufactured according to EN 837-1 standards.





## STANDARD PARAMETERS

- Design: EN 837-1
- Closing: Adjusted display
- Mounting: See attached diagram **A** or **B**
- Threaded connection: **Ø40**: 1/8"BSPT; **Ø50-Ø63**: ¼"BSPT (UNE-EN 10226-1)
- IP protection: IP44 (EN 60529 / IEC 529)
- Accuracy: Class 2.5
- Pressure limits:
  - Static: ¾ end of scale
  - Oscillating : ⅔ end of scale
  - Maximum: Full scale for a short period of time
- Temperature limits:
  - Environment: -40+60°C
  - Fluid: 60°C
- Pressure range: **-1...0...25** Bar
- Scale: Bar/Psi
- Subdivision: According to standard EN 837-1
- Sensor: Bourdon tube ("C" form)
- Position pointer: Red pointer (only for ranges 0+4/0+6/0+12)

## MATERIALS

- Case: Polyethylene
- Bourdon tube and moving parts: Copper alloy
- Threaded connection: Brass
- Display: Acrylic
- Dial: White laquered aluminum
- Pointer: Black laquered aluminum
- Welding: Cu-Sn
- Red pointer: Red Plastic

## Application:

- Compressed air
- Compressor
- Air conditioning
- Hydraulics
- Pneumatic

## A Bottom

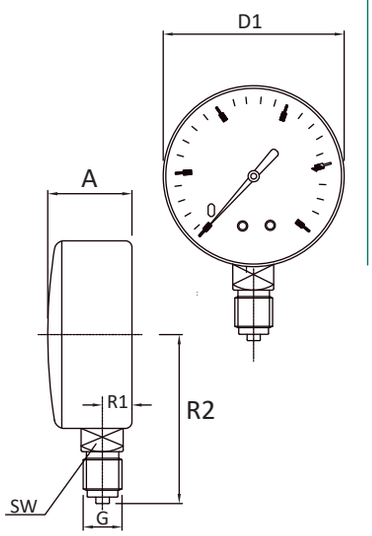


## B Back

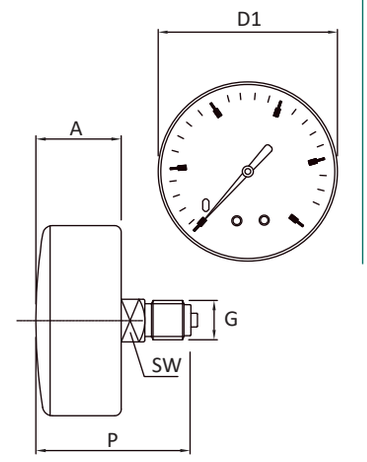


| DIMENSIONS (mm) | | | | | | | | | WEIGHT (g) |
|---|---|---|---|---|---|---|---|---|---|
| DN | Mounting | R1 | A | D1 | G | R2 | SW | P | |
| Ø40 | A | 8 | 25 | 40 | 1/8" BSPT | 37 | 11 | - | 40 |
| Ø40 | B | - | 25 | 40 | 1/8" BSPT | - | 11 | 39 | 45 |
| Ø50 | A | 8 | 27 | 53 | ¼" BSPT | 37 | 11 | - | 57 |
| Ø50 | B | - | 27 | 53 | ¼" BSPT | - | 11 | 47 | 73 |
| Ø63 | A | 8 | 27 | 63 | ¼" BSPT | 37 | 11 | - | 65 |
| Ø63 | B | - | 27 | 63 | ¼" BSPT | - | 11 | 47 | 79 |

## How to order

**1.Case diameter**: Ø40 Ø50 Ø63

**2.Pressure range (Bar)**: -1+0 0+2.5 0+6 0+12 0+25 0+1.6 0+4 0+10 0+16

**3.Pressure Unit**: Bar/Psi

**4.Mounting**: A B

**5.Threaded connection**: ¼"BSPT 1/8"BSPT

**6.Connection material**: Brass

**7.Calibration certificate traceable to ENAC**: 7 points certificate; Without certificate

| | 1 | 2 | 3 | 4 | 5 | 6 | 7 |
|---|---|---|---|---|---|---|---|
| M0101 - | | | | | | | |


www.termometros.com
Order it online!
+34 94 676 63 64
info@termometros.com





Gesa Termómetros S.L. · C/ Barrikako Bidea Pol. Ind. Igeltzera Pabellón D3 · 48610 Urduliz (Bizkaia) SPAIN

# M 02 01

## Pressure gauge with case in carbon steel

Designed to monitor pressure in systems not subjected to vibrations. Suitable for all gaseous and liquid media that will not obstruct the pressure system or attack copper alloy parts.
Especially designed for pneumatic and hydraulic circuits.
Manufactured according to EN 837-1 standards.



### STANDARD PARAMETERS

- Design: EN 837-1
- Closing: Adjusted
- Mounting: See attached diagram **A** or **B**
- Threaded connection: **Ø63**: ¼"BSP; **Ø75**: ⅜"BSP; **Ø100**: ½"BSP (UNE-EN 10226-1)
- IP protection: IP54 (EN 60529 / IEC 529)
- Accuracy: **Ø63-Ø75**: Class 2.5 / **Ø100**: Class 1.6
- Pressure limits:
  - Static: ¾ end of scale
  - Oscillating: ⅔ end of scale
  - Maximum: Full scale for a short period of time
- Temperature limits:
  - Environment: -40+80°C
  - Fluid: 80°C
- Range: **-1...0...1000** Bar
- Scale: Bar/Psi
- Subdivision: According to standard EN 837-1
- Sensor element: Bourdon tube (<60 Bar: "C" form; >60 Bar: helical)

### MATERIALS

- Case: Carbon steel painted in black
- Bourdon tube and moving parts: Copper Alloy
- Threaded connection: Brass
- Display: Glass
- Dial: White laquered aluminum
- Pointer: Black laquered aluminum
- Welding: P<250 Bar: Cu-Sn; P>250 Bar: Cu-Ag

### Application:

- Compressed air
- Compressor
- Air conditioning
- Hydraulics
- Pneumatics

## A Bottom

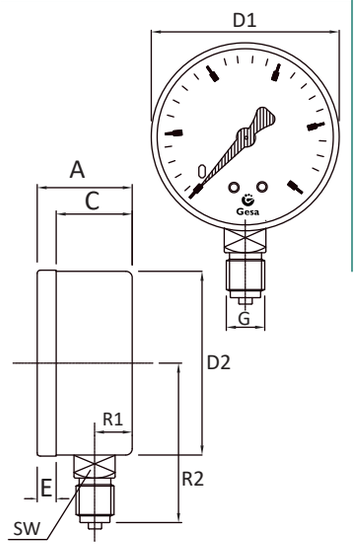


## B Back

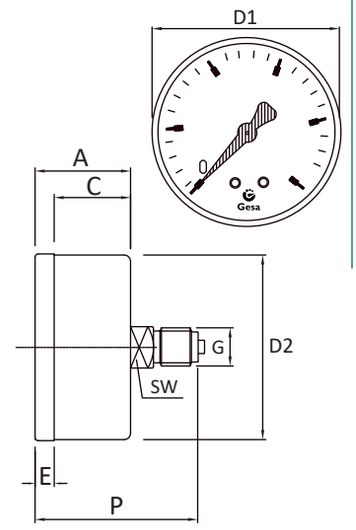


| DIMENSIONS (mm) | | | | | | | | | | | | WEIGHT(g) |
|---|---|---|---|---|---|---|---|---|---|---|---|---|
| DN | Mounting | R1 | A | C | D1 | E | D2 | G | R2 | SW | P | |
| Ø63 | A | 10 | 28 | 17 | 40 | 10 | 62 | ¼" BSP | 51 | 14 | - | 110 |
| Ø63 | B | - | 28 | 17 | 40 | 10 | 62 | ¼" BSP | - | 14 | 46 | 122 |
| Ø75 | A | 10 | 30 | 19 | 53 | 11 | 74 | ⅜" BSP | 60 | 17 | - | 165 |
| Ø75 | B | - | 30 | 19 | 53 | 11 | 74 | ⅜" BSP | - | 17 | 55 | 170 |
| Ø100 | A | 16 | 45 | 23 | 63 | 22 | 98 | ½" BSP | 83 | 17 | - | 383 |
| Ø100 | B | - | 45 | 23 | 63 | 22 | 98 | ½" BSP | - | 17 | 75 | 405 |

## How to order

**1.Case diameter**

Ø63 Ø75 Ø100

**2.Pressure range (Bar)**

-1+0 -1+1.5 -1+5 -1+12 -1+24 0+1 0+2.5 0+6 0+16 0+40 0+100 0+250 0+400 0+1000
-1+0.5 -1+3 -1+9 -1+15 0+0.6 0+1.6 0+4 0+10 0+25 0+60 0+160 0+315 0+600

**3.Pressure scale**

Bar/Psi

**4.Mounting**

A B

**5.Threaded connection**

¼"BSP ½"BSP ⅜"BSP
¼"BSPT ½"BSPT ⅜"BSPT

**6.Connection material**

Brass

**7.Calibration certificate traceable to ENAC**

7 points certificate
Without certificate

**M0201 -**

| 1 | 2 | 3 | 4 | 5 | 6 | 7 |
|---|---|---|---|---|---|---|
| | | | | | | |

www.termometros.com


Gesa Termómetros S.L. · C/ Barrikako Bidea Pol. Ind. Igeltzera Pabellón D3 · 48610 Urduliz (Bizkaia) SPAIN





Order it online!
+34 94 676 63 64
info@termometros.com

# Pressure gauge in stainless steel with sealed ring

**M 03 01**

Especially designed for difficult operating conditions like vibrations or rapid pressure changes. Suitable for use in systems with low viscosity that do not attack copper alloys such as cooling systems.
Manufactured according to EN 837-1 standards.





## STANDARD PARAMETERS

- Design: EN 837-1
- Closing: Sealed ring
- Mounting: See attached diagram **A** , **B**, **C** or **D**
- Threaded connection: **Ø63**: ¼"BSP; **Ø80**: ⅜"BSP; **Ø100**: ½"BSP (UNE-EN 10226-1)
- IP protection: IP65 (EN 60529 / IEC 529)
- Accuracy: Class 1.6
- Pressure limits:
  - Static: ¾ end of scale
  - Oscillating: ⅔ end of scale
  - Maximum: Full scale for a short period of time
- Temperature limits:
  - Environment: -20+50°C
  - Fluid: Brass connection: 80°C / Steel connection: 100°C
- Range: **-1...0...1000** Bar
- Scale: **Bar/Psi, Bar** or **cmHg**
- Subdivision: According to standard EN 837-1
- Antivibration fluid: Glycerine 99.8%
- Sensor: Bourdon tube (<60 Bar: "C" form; >60 Bar: helical)
- Overtemperature relief system: Upper plug

## MATERIALS

- Case: AISI 304 Stainless steel
- Bourdon tube and moving parts: **Copper Alloy** or **AISI 316 Stainless steel**
- Threaded connection: **Brass** or **AISI 316 Stainless steel**
- Display: Polycarbonate
- Dial: White laquered aluminum
- Pointer: Black laquered aluminum
- Welding: **P**<250 Bar: Cu-Sn; P>250 Bar: Cu-Ag / TIG Welding
- Overtemperature relief plug: Neoprene

## Application:

- **Ship supplies**
- **Irrigation systems**
- **Air conditioning**
- **Food industry**
- **Pneumatics**
- **Hydraulics**

## A Bottom

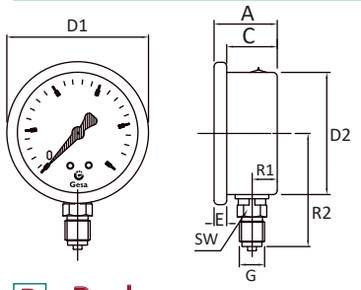


## B Back

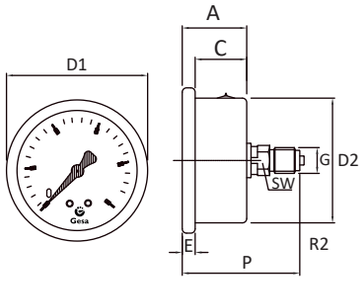


## C Bottom with back flange

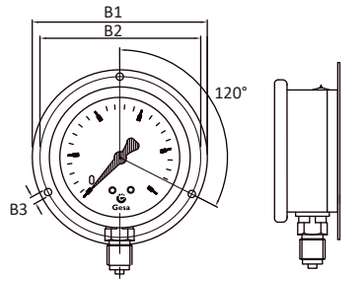


## D Back with frontal flange

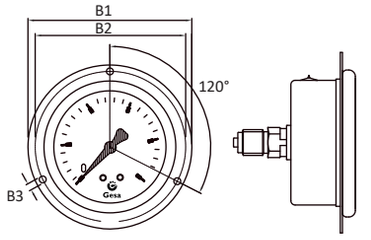


## DIMENSIONS (mm) / WEIGHT (g)

| DN | Mounting | R1 | A | C | D1 | E | D2 | G | R2 | SW | P | B1 | B2 | B3 | WEIGHT (g) |
|---|---|---|---|---|---|---|---|---|---|---|---|---|---|---|---|
| Ø63 | A/C | 10 | 29 | 23 | 68 | 6 | 61 | ¼ BSP | 56 | 14 | - | 86 | 80 | 3,5 | 188 |
| Ø63 | B/D | - | 29 | 23 | 68 | 7 | 61 | ¼ BSP | - | 14 | 58 | 86 | 80 | 3,5 | 184 |
| Ø80 | A/C | 10 | 30 | 22 | 88 | 8 | 80 | ⅜ BSP | 60 | 17 | - | 112 | 104 | 5 | 335 |
| Ø80 | B/D | - | 30 | 22 | 88 | 8 | 80 | ⅜ BSP | - | 17 | 61 | 112 | 104 | 5 | 299 |
| Ø100 | A/C | 16 | 37 | 29 | 109 | 8 | 99 | ½" BSP | 83 | 21 | - | 132 | 124 | 5 | 550 |
| Ø100 | B/D | - | 37 | 29 | 109 | 8 | 99 | ½" BSP | - | 21 | 77 | 132 | 124 | 5 | 547 |

## How to order

**1.Case diameter**: Ø63 Ø80 Ø100

**2.Pressure range (Bar)**: -1+0 -1+0.5 -1+1.5 -1+3 -1+5 -1+9 -1+12 -1+15 -1+24 0+0.6 0+1 0+1.6 0+2.5 0+4 0+6 0+10 0+16 0+25 0+40 0+60 0+100 0+160 0+250 0+315 0+400 0+600 0+1000 -76+0

**3.Pressure scale**: Bar Bar/Psi cmHg

**4.Mounting**: A B C D

**5.Threaded connection**: ¼"BSP ¼"BSPT ¼" SAE ½"BSP ½"BSPT 7/16" SAE ⅜"BSP ⅜"BSPT

**6.Connection material**: Brass / AISI 316 Stainless steel

**7.Antivibration fluid**: Glycerine 99.8%

**8.Calibration certificate traceable to ENAC**: 7 Points Certificate / Without certificate

**M0301 -** | 1 | 2 | 3 | 4 | 5 | 6 | 7 | 8 |


www.termometros.com
Order it online!



+34 94 676 63 64
info@termometros.com
Gesa Termómetros S.L. · C/ Barrikako Bidea Pol. Ind. Igeltzera Pabellón D3 · 48610 Urduliz (Bizkaia) SPAIN


M3

# M 03 04

## Pressure gauge in stainless steel with bayonet closing

Suitable for all gaseous and liquid media that will not obstruct the pressure system or attack copper alloy parts.
Especially designed for difficult conditions of use, as there are vibrations or quick changes of pressure. Manufactured according to standard EN 837-1



### STANDARD PARAMETERS

- Design: EN 837-1
- Closing: Bayonet
- Mounting: See attached diagram **A** , **B**, **C** or **D**
- Threaded connection: **Ø63**: ¼"BSP; **Ø100-Ø150**: ½"BSP (UNE-EN 10226-1)
- IP protection: IP65 (EN 60529 / IEC 529)
- Accuracy: **Ø63**: Class 1.6; **Ø100-Ø150**: Class 1.0
- Pressure limits:
  - Static: Full scale
  - Oscillating: 0.9 end of scale
  - Maximum: 1.3 end of scale for a short period of time
- Temperature limits:
  - Environment: -20+50°C (Glycerine) / -20+80°C (dry)
  - Fluid: Brass connection: 80°C / Steel connection: 100°C (Glycerine), 200°C (dry)
- Range: **-1...0...1000** Bar
- Scale: **Bar/Psi, Bar** or **cmHg**
- Subdivision: According to standard EN 837-1
- Antivibration fluid: **Glycerine 99.8%** or **dry**
- Pointer: Micrometric adjustment
- Sensor element: Bourdon tube (<60 Bar: "C" form; >60 Bar: helical)
- Pressure relief system: Blow-out disc
- Overtemperature relief system: Upper plug

### MATERIALS

- Case: AISI 304 Stainless steel
- Bourdon tube and moving parts: **Copper Alloy** or **AISI 316 Stainless steel**
- Threaded connection: **Brass** or **AISI 316 Stainless steel**
- Display: Safety glass
- Dial: White laquered aluminum
- Pointer: Black laquered aluminum
- Welding: P<250 Bar: Cu-Sn; P>250 Bar: Cu-Ag / TIG Welding
- Blow-out disc and overtemperature relief plug: Neoprene

### Application:

- Ship supplies
- Irrigation systems
- Air conditioning
- Food industry
- Pneumatics
- Hydraulics

### A Bottom

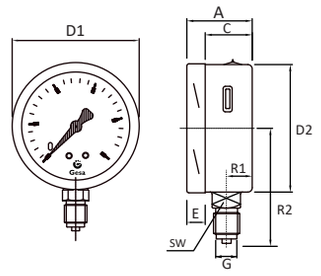


### B Back

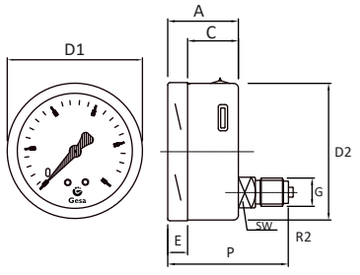


### C Bottom with back flange

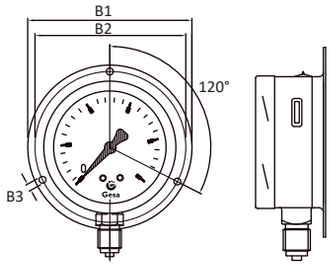


### D Back with frontal flange

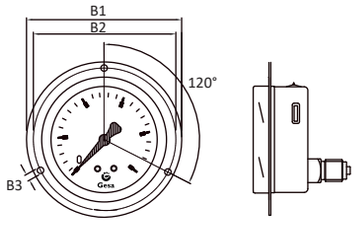


| DIMENSIONS (mm) | | | | | | | | | | | | | | | WEIGHT (g) | |
|---|---|---|---|---|---|---|---|---|---|---|---|---|---|---|---|---|
| DN | Mounting | R1 | A | C | D1 | E | D2 | G | R2 | SW | P | B1 | B2 | B3 | Without Glycerine | With Glycerine |
| Ø63 | A/C | 10 | 34 | 22 | 64 | 12 | 62 | ¼ BSP | 55 | 14 | - | 86 | 80 | 3,5 | 158 | 230 |
| Ø63 | B/D | - | 34 | 22 | 64 | 12 | 62 | ¼ BSP | - | 14 | 56 | 86 | 80 | 3,5 | 157 | 228 |
| Ø100 | A/C | 16 | 49 | 32 | 101 | 17 | 99 | ½" BSP | 83 | 22 | - | 132 | 124 | 5 | 533 | 867 |
| Ø100 | B/D | - | 49 | 32 | 101 | 17 | 99 | ½" BSP | - | 22 | 86 | 132 | 124 | 5 | 550 | 890 |
| Ø150 | A/C | 16 | 50 | 32 | 149 | 18 | 146 | ½" BSP | 113 | 22 | - | 192 | 184 | 5 | 950 | 1712 |
| Ø150 | B/D | - | 50 | 32 | 149 | 18 | 146 | ½" BSP | - | 22 | 87 | 192 | 184 | 5 | 824 | 1750 |

## How to order

**1.Case diameter**

Ø63 Ø100 Ø150

**2.Pressure range (Bar)**

-1+0 -1+1.5 -1+5 -1+12 -1+24 0+1 0+2.5 0+6 0+16 0+40 0+100 0+250 0+400 0+1000
-1+0.5 -1+3 -1+9 -1+15 0+0.6 0+1.6 0+4 0+10 0+25 0+60 0+160 0+315 0+600 -76+0

**3.Pressure scale**

Bar Bar/Psi cmHg

**4.Mounting**

A B C D

**5.Threaded connection**

¼"BSP ½"BSP ⅜"BSP
¼"BSPT ½"BSPT ⅜"BSPT
¼" SAE 7/16" SAE M20x150

**6.Connection material**

Brass
AISI 316 Stainless steel

**7.Antivibration fluid**

Glycerine 99.8%
Without fluid

**8.Calibration certificate traceable to ENAC**

7 Points Certificate
Without certificate

**M0304 -** | 1 | 2 | 3 | 4 | 5 | 6 | 7 | 8 |


www.termometros.com
Order it online!



+34 94 676 63 64
info@termometros.com





Gesa Termómetros S.L. · C/ Barrikako Bidea Pol. Ind. Igeltzera Pabellón D3 · 48610 Urduliz (Bizkaia) SPAIN

# Pressure gauge all in stainless steel with sealed ring

**M 03 05**

Especially designed for difficult operating conditions like vibrations or rap pressure changes. Suitable for use in systems with low viscosity that do not attack copper alloys such as cooling systems.
Manufactured according to EN 837-1 standards.



## STANDARD PARAMETERS

- Design: EN 837-1
- Closing: Sealed ring
- Mounting See attached diagram **A** , **B**, **C** or **D**
- Threaded connection **Ø63**: ¼"BSP; **Ø80**: ⅜"BSP; **Ø100**: ½"BSP (UNE-EN 10226-1)
- IP protection IP65 (EN 60529 / IEC 529)
- Accuracy: Class 1.6
- Pressure limits:
  - Static: ¾ end of scale
  - Oscillating: ⅔ end of scale
  - Maximum: Full scale for a short period of tim
- Temperature limits:
  - Environment: -20+50°C
  - Fluid: 100°C
- Range: **-1...0...1000** Bar
- Scale: **Bar/Psi, Bar** or **cmHg**
- Subdivision: According to standard EN 837-1
- Antivibration flui Glycerine 99.8%
- Sensor: Bourdon tube (<60 Bar: "C" form; >60 Bar: helical)
- Overtemperature relief system: Upper plug

## MATERIALS

- Case: AISI 304 Stainless steel
- Bourdon tube and moving parts: AISI 316 Stainless steel
- Threaded connection: AISI 316 Stainless steel
- Display: Polycarbonate
- Dial: White laquered aluminum
- Pointer: Black laquered aluminum
- Welding: TIG Welding
- Overtemperature relief plug: Neoprene

### Application:

- Ship supplies
- Irrigation systems
- Air conditioning
- Food industry
- Pneumatics
- Hydraulics

### A Bottom

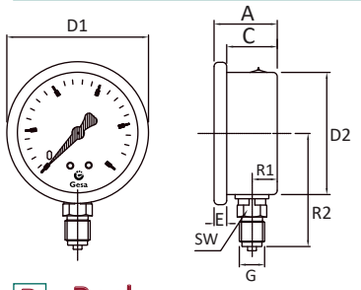


### B Back

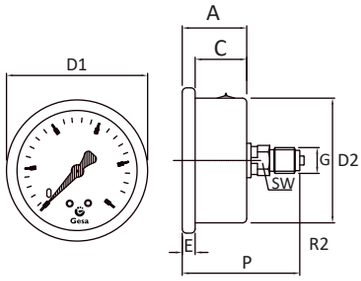


### C Bottom with back flange

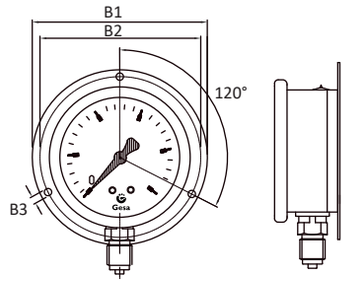


### D Back with frontal flange

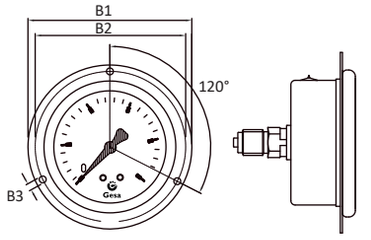


## DIMENSIONS (mm) / WEIGHT (g)

| DN | Mounting | R1 | A | C | D1 | E | D2 | G | R2 | SW | P | B1 | B2 | B3 | WEIGHT (g) |
|---|---|---|---|---|---|---|---|---|---|---|---|---|---|---|---|
| Ø63 | A/C | 10 | 29 | 23 | 68 | 6 | 61 | ¼ BSP | 56 | 14 | - | 86 | 80 | 3,5 | 188 |
| Ø63 | B/D | - | 29 | 23 | 68 | 7 | 61 | ¼ BSP | - | 14 | 58 | 86 | 80 | 3,5 | 184 |
| Ø80 | A/C | 10 | 30 | 22 | 88 | 8 | 80 | ⅜ BSP | 60 | 17 | - | 112 | 104 | 5 | 335 |
| Ø80 | B/D | - | 30 | 22 | 88 | 8 | 80 | ⅜ BSP | - | 17 | 61 | 112 | 104 | 5 | 299 |
| Ø100 | A/C | 16 | 37 | 29 | 109 | 8 | 99 | ½" BSP | 83 | 21 | - | 132 | 124 | 5 | 550 |
| Ø100 | B/D | - | 37 | 29 | 109 | 8 | 99 | ½" BSP | - | 21 | 77 | 132 | 124 | 5 | 547 |

## How to order

**1.Case diameter**
Ø63 Ø80 Ø100

**2.Pressure range (Bar)**
-1+0 -1+1.5 -1+5 -1+12 -1+24 0+1 0+2.5 0+6 0+16 0+40 0+100 0+250 0+400 0+1000
-1+0.5 -1+3 -1+9 -1+15 0+0.6 0+1.6 0+4 0+10 0+25 0+60 0+160 0+315 0+600 -76+0

**3.Pressure scale**
Bar Bar/Psi cmHg

**4.Mounting**
A B C D

**5.Threaded connection**
¼"BSP ½"BSP ⅜"BSP
¼"BSPT ½"BSPT ⅜"BSPT
¼" SAE 7/16" SAE

**6.Connection material**
AISI 316 Stainless steel

**7.Antivibration fluid**
Glycerine 99.8%

**8.Calibration certificate traceable to ENAC**
7 Points Certificat
Without certificat

**M0305 -** | 1 | 2 | 3 | 4 | 5 | 6 | 7 | 8 |


www.termometros.com
Order it online!
+34 94 676 63 64
info@termometros.com




Gesa Termómetros S.L. · C/ Barrikako Bidea Pol. Ind. Igeltzera Pabellón D3 · 48610 Urduliz (Bizkaia) SPAIN

# M 03 06

## Pressure gauge in stainless steel with bayonet closing

Suitable for all gaseous and liquid media that will not obstruct the pressure system or attack copper alloy parts.
Especially designed for difficult conditions of use, as there are vibrations or quic changes of pressure. Manufactured according to standard EN 837-1



### STANDARD PARAMETERS

- Design: EN 837-1
- Closing: Bayonet
- Mounting See attached diagram **A** , **B**, **C** or **D**
- Threaded connection **Ø63**: ¼"BSP; **Ø100-Ø150**: ½"BSP (UNE-EN 10226-1)
- IP protection IP65 (EN 60529 / IEC 529)
- Accuracy: **Ø63**: Class 1.6; **Ø100-Ø150**: Class 1.0
- Pressure limits:
  - Static: Full scale
  - Oscillating: 0.9 end of scale
  - Maximum: 1.3 end of scale for a short period of tim
- Temperature limits:
  - Environment: -20+50°C (Glycerine) / -20+80°C (dry)
  - Fluid: 100°C (Glycerine), 200°C (dry)
- Range: **-1...0...1000** Bar
- Scale: **Bar/Psi, Bar** or **cmHg**
- Subdivision: According to standard EN 837-1
- Antivibration flui **Glycerine 99.8%** or **dry**
- Pointer: Micrometric adjustment
- Sensor element: Bourdon tube (<60 Bar: "C" form; >60 Bar: helical)
- Pressure relief system: Blow-out disc
- Overtemperature relief system: Upper plug

### MATERIALS

- Case: AISI 304 Stainless steel
- Bourdon tube and moving parts: AISI 316 Stainless steel
- Threaded connection: AISI 316 Stainless steel
- Display: Safety glass
- Dial: White laquered aluminum
- Pointer: Black laquered aluminum
- Welding: P<250 Bar: Cu-Sn; P>250 Bar: Cu-Ag / TIG Welding
- Blow-out disc and overtemperature relief plug: Neoprene

### Application:

- Ship supplies
- Irrigation systems
- Air conditioning
- Food industry
- Pneumatics
- Hydraulics

### A Bottom

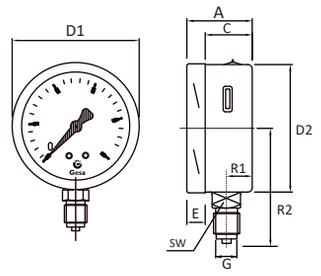


### B Back

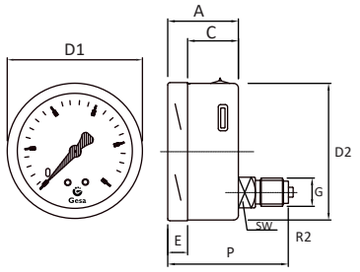


### C Bottom with back flange

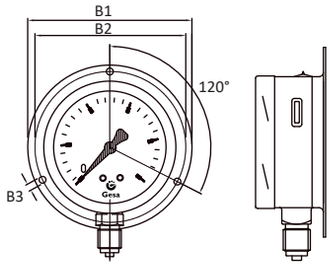


### D Back with frontal flange

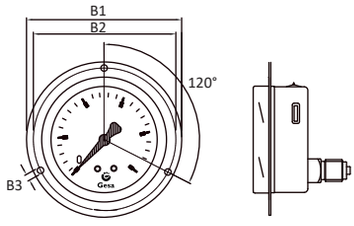


| DIMENSIONS (mm) | | | | | | | | | | | | | | | WEIGHT (g) | |
|---|---|---|---|---|---|---|---|---|---|---|---|---|---|---|---|---|
| DN | Mounting | R1 | A | C | D1 | E | D2 | G | R2 | SW | P | B1 | B2 | B3 | Without Glycerine | With Glycerine |
| Ø63 | A/C | 10 | 34 | 22 | 64 | 12 | 62 | ¼ BSP | 55 | 14 | - | 86 | 80 | 3,5 | 158 | 230 |
| Ø63 | B/D | - | 34 | 22 | 64 | 12 | 62 | ¼ BSP | - | 14 | 56 | 86 | 80 | 3,5 | 157 | 228 |
| Ø100 | A/C | 16 | 49 | 32 | 101 | 17 | 99 | ½" BSP | 83 | 22 | - | 132 | 124 | 5 | 533 | 867 |
| Ø100 | B/D | - | 49 | 32 | 101 | 17 | 99 | ½" BSP | - | 22 | 86 | 132 | 124 | 5 | 550 | 890 |
| Ø150 | A/C | 16 | 50 | 32 | 149 | 18 | 146 | ½" BSP | 113 | 22 | - | 192 | 184 | 5 | 950 | 1712 |
| Ø150 | B/D | - | 50 | 32 | 149 | 18 | 146 | ½" BSP | - | 22 | 87 | 192 | 184 | 5 | 824 | 1750 |

## How to order

**1.Case diameter**

Ø63 Ø100 Ø150

**2.Pressure range (Bar)**

-1+0 -1+1.5 -1+5 -1+12 -1+24 0+1 0+2.5 0+6 0+16 0+40 0+100 0+250 0+400 0+1000
-1+0.5 -1+3 -1+9 -1+15 0+0.6 0+1.6 0+4 0+10 0+25 0+60 0+160 0+315 0+600 -76+0

**3.Pressure scale**

Bar Bar/Psi cmHg

**4.Mounting**

A B C D

**5.Threaded connection**

¼"BSP ½"BSP ⅜"BSP
¼"BSPT ½"BSPT ⅜"BSPT
¼" SAE 7/16" SAE M20x150

**6.Connection material**

AISI 316 Stainless steel

**7.Antivibration fluid**

Glycerine 99.8%
Without fluid

**8.Calibration certificate traceable to ENAC**

7 Points Certificat
Without certificat

**M0306 -** | 1 | 2 | 3 | 4 | 5 | 6 | 7 | 8 |


www.termometros.com
Order it online!
+34 94 676 63 64
info@termometros.com




Gesa Termómetros S.L. · C/ Barrikako Bidea Pol. Ind. Igeltzera Pabellón D3 · 48610 Urduliz (Bizkaia) SPAIN

# Capsule pressure gauge with black steel case

**M 04 01**

Capsule pressure gauges with elastic element and moving parts in copper alloy manufactured according to EN 837-3 standards.

Especially suitable for gaseous media not subjected to vibrations with a maximum temperature not higher than 100ºC.






**Application:**

- **Gas facilities**
- **Low pressure**

## STANDARD PARAMETERS

Design: EN 837-3
Closing: Bayonet
Mounting: See attached diagram **A**
Threaded connection: **Ø63**: ¼"BSP; **Ø100**: ½"BSP (UNE-EN 10226-1)
IP protection: IP43 (EN 60529 / IEC 529)
Accuracy: **Ø63**: Class 1.6 / **Ø100**: Class 1.0
Pressure limits:
- Static: Full scale
- Oscillating: 0.9 end of scale
- Maximum: Full scale

Temperature limits:
- Environment: -40+80°C
- Fluid: 100°C

Range: **0...600** mbar
Scale: mbar
Subdivision: According to standard EN 837-3
Sensor element: Capsule
Pointer: Micrometric adjustment

## MATERIALS

Case: Carbon steel painted in black
Capsule and moving parts: Copper Alloy
Threaded connection: Brass
Display: **Ø63**: Acrylic (Adjusted closing)/ **Ø100**: Glass (Bayonet closing)
Dial: White laquered aluminum
Pointer: Black laquered aluminum
Welding: Cu-Sn

**A Bottom Ø100**

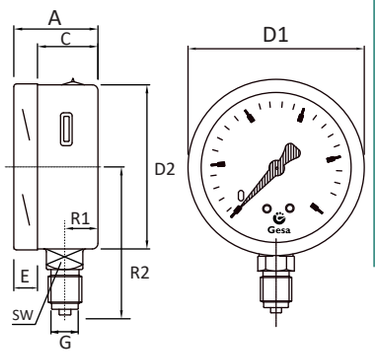


**A Bottom Ø63**

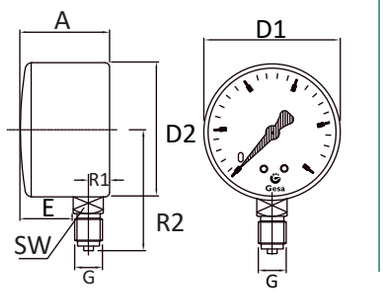


| DIMENSIONS (mm) | | | | | | | | | | | WEIGHT (g) |
|---|---|---|---|---|---|---|---|---|---|---|---|
| DN | Mounting | R1 | A | C | D1 | E | D2 | G | R2 | SW | |
| Ø63 | A | 11 | 38 | - | 66 | 22 | 66 | ¼ BSP | 57 | 14 | 214 |
| Ø100 | A | 16 | 49 | 32 | 101 | 17 | 99 | ½" BSP | 83 | 22 | 559 |

## How to order

**1.Case diameter**: Ø63, Ø100

**2.Pressure range (Bar)**: 0+25, 0+40, 0+60, 0+100, 0+160, 0+250, 0+400, 0+600

**3.Pressure scale**: mbar

**4.Mounting**: A

**5.Threaded connection**: ¼"BSP, ½"BSP

**6.Connection material**: Brass

**7.Calibration certificate traceable to ENAC**: 7 point certificate, Without certificate

| M0401 - | 1 | 2 | 3 | 4 | 5 | 6 | 7 |
|---|---|---|---|---|---|---|---|
| | | | | | | | |


www.termometros.com

Order it online!

+34 94 676 63 64

info@termometros.com





Gesa Termómetros S.L. · C/ Barrikako Bidea Pol. Ind. Igeltzera Pabellón D3 · 48610 Urduliz (Bizkaia) SPAIN

# M 04 02

## Capsule pressure gauge with zincked steel case

Capsule pressure gauges with elastic element and moving parts in copper alloy manufactured according to EN 837-3 standards.

Especially suitable for gaseous media not subjected to vibrations with a maximum temperature not higher than 100ºC.




| STANDARD PARAMETERS |
|---|
| Design: EN 837-3 |
| Closing: Ring screwed to case |
| Mounting: See attached diagram **A** |
| Threaded connection: **Ø63**: ¼"BSP; **Ø100**: ½"BSP (UNE-EN 10226-1) |
| IP protection: IP44 (EN 60529 / IEC 529) |
| Accuracy: Class 1.6 |
| Pressure limits: |
| Static: Full scale |
| Oscillating: 0.9 end of scale |
| Maximum: Full scale |
| Temperature limits: |
| Environment: -40+80°C |
| Fluid: 100°C |
| Range: **0...2000** mbar |
| Scale: mbar |
| Subdivision: According to standard EN 837-3 |
| Sensor element: Capsule |

**Application:**

- **Gas facilities**
- **Low pressure**

| MATERIALS |
|---|
| Case: Zincked carbon steel with screwed closing |
| Capsule and moving parts: Copper Alloy |
| Threaded connection: Brass |
| Display: Glass |
| Dial: White laquered aluminum |
| Pointer: Black laquered aluminum |
| Welding: Cu-Sn |

### A Bottom

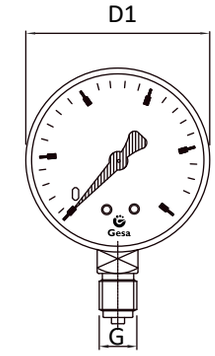


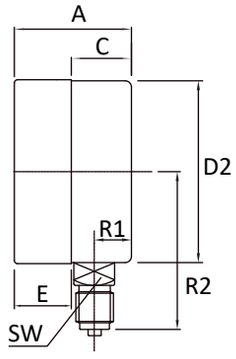


| DIMENSIONS (mm) | | | | | | | | | | | WEIGHT (g) |
|---|---|---|---|---|---|---|---|---|---|---|---|
| **DN** | **Mounting** | **R1** | **A** | **C** | **D1** | **E** | **D2** | **G** | **R2** | **SW** | |
| Ø63 | A | 12 | 38 | 16 | 64 | 22 | 62 | ¼ BSP | 59 | 11 | 198 |
| Ø100 | A | 15 | 64 | 26 | 107 | 38 | 105 | ½" BSP | 90 | 22 | 738 |

## How to order

**1.Case diameter**: Ø63, Ø100

**2.Pressure range (Bar)**: 0+25, 0+40, 0+60, 0+100, 0+160, 0+250, 0+400, 0+600, 0+1000, 0+2000

**3.Pressure scale**: mbar

**4.Mounting**: A

**5.Threaded connection**: ¼"BSP, ½"BSP

**6.Connection material**: Brass

**7.Calibration certificate traceable to ENAC**: 7 point certificate, Without certificate

| M0402 - | 1 | 2 | 3 | 4 | 5 | 6 | 7 |
|---|---|---|---|---|---|---|---|
| | | | | | | | |


www.termometros.com

Order it online!

+34 94 676 63 64

info@termometros.com



Gesa Termómetros S.L. · C/ Barrikako Bidea Pol. Ind. Igeltzera Pabellón D3 · 48610 Urduliz (Bizkaia) SPAIN

# Capsule pressure gauge with stainless steel case

M 04 03






Capsule pressure gauges with elastic element and moving parts in copper alloy manufactured according to EN 837-3 standards.

Especially suitable for gaseous media not subjected to vibrations with a maximum temperature not higher than 100ºC.

**Application:**
- **Gas facilities**
- **Low pressure**

| STANDARD PARAMETERS |
|---|
| Design: EN 837-3 |
| Closing: Bayonet |
| Mounting: See attached diagram **A** |
| Threaded connection: **Ø63**: ¼"BSP; **Ø100**: ½"BSP (UNE-EN 10226-1) |
| IP protection: IP65 (EN 60529 / IEC 529) |
| Accuracy: **Ø63**: Class 1.6 / **Ø100**: Class 1.0 |
| Pressure limits: |
| Static: Full scale |
| Oscillating: 0.9 end of scale |
| Maximum: Full scale |
| Temperature limits: |
| Environment: -40+80°C |
| Fluid: 100°C |
| Range: **0...600** mbar |
| Scale: mbar |
| Subdivision: According to standard EN 837-3 |
| Sensor element: Capsule |
| Pointer: Micrometric adjustment |

| MATERIALS |
|---|
| Case: AISI 304 Stainless steel with bayonet closing |
| Capsule and moving parts: Copper Alloy |
| Threaded connection: Brass |
| Display: Safety glass |
| Dial: White laquered aluminum |
| Pointer: Black laquered aluminum |
| Welding: Cu-Sn |

**A Bottom Ø100**

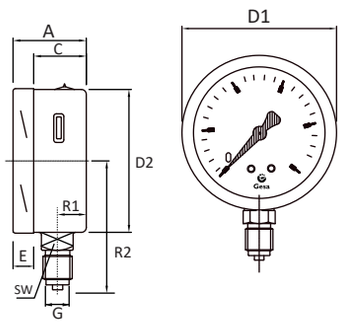


**A Bottom Ø63**

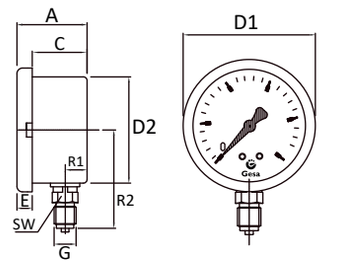


| DIMENSIONS (mm) | | | | | | | | | | | WEIGHT (g) |
|---|---|---|---|---|---|---|---|---|---|---|---|
| **DN** | **Mounting** | **R1** | **A** | **C** | **D1** | **E** | **D2** | **G** | **R2** | **SW** | |
| Ø63 | A | 10 | 37 | 27 | 74 | 10 | 66 | ¼ BSP | 55 | 14 | 199 |
| Ø100 | A | 16 | 49 | 32 | 101 | 17 | 99 | ½" BSP | 83 | 22 | 545 |

## How to order

**1.Case diameter**: Ø63, Ø100

**2.Pressure range (Bar)**: 0+25, 0+40, 0+60, 0+100, 0+160, 0+250, 0+400, 0+600

**3.Pressure scale**: mbar

**4.Mounting**: A

**5.Threaded connection**: ¼"BSP, ½"BSP

**6.Connection material**: Brass

**7.Calibration certificate traceable to ENAC**: 7 point certificate, Without certificate

| | 1 | 2 | 3 | 4 | 5 | 6 | 7 |
|---|---|---|---|---|---|---|---|
| **M0403 -** | | | | | | | |


www.termometros.com

Order it online!

+34 94 676 63 64

info@termometros.com





Gesa Termómetros S.L. · C/ Barrikako Bidea Pol. Ind. Igeltzera Pabellón D3 · 48610 Urduliz (Bizkaia) SPAIN

# M 05 01

## Pressure gauge for refrigeration systems with case in stainless steel

Suitable for all gaseous and liquid media that will not obstruct the pressure system or attack copper alloy parts.
Especially designed for difficult conditions of use, as there are vibrations or quick changes of pressure.
Also useful for adverse ambients. Manufactured according to EN 837-1 standards.



| STANDARD PARAMETERS |
|---|
| Design: EN 837-1 |
| Closing: Sealed ring |
| Mounting: See attached diagrams **A** , **B**, **C** or **D** |
| Threaded connection: **Ø63**: ¼"BSP; **Ø100**: ½"BSP (UNE-EN 10226-1) |
| IP protection: IP65 (EN 60529 / IEC 529) |
| Accuracy: Class 1.6 |
| Pressure limits: |
| Static: ¾ end of scale |
| Oscillating: ⅔ end of scale |
| Maximum: Full scale for a short period of time |
| Temperature limits: |
| Environment: -20+50°C |
| Fluid: 80°C |
| Range: **-1+12** or **-1+24** Bar |
| Scale: Bar/R22/R134a/R404a/R507 |
| Subdivision: According to standard EN 837-1 |
| Antivibration fluid: Glycerine 99.8% |
| Sensor element: Bourdon tube ("C" form) |
| Overtemperature relief system: Upper plug |

**Application:**
- Refrigeration
- Air conditioning
- Food industry

| MATERIALS |
|---|
| Case and ring: AISI 304 Stainless steel |
| Bourdon tube and moving parts: Cu Alloy |
| Threaded connection: Brass |
| Visor: Polycarbonate |
| Dial: White laquered aluminum |
| Pointer: Black laquered aluminum |
| Welding: Cu-Sn |
| Overtemperature relief plug: Neoprene |

### A Bottom

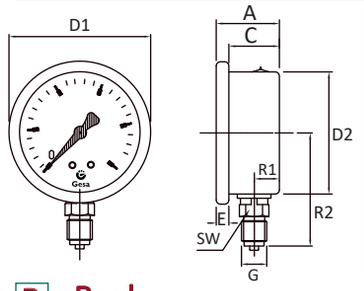


### B Back

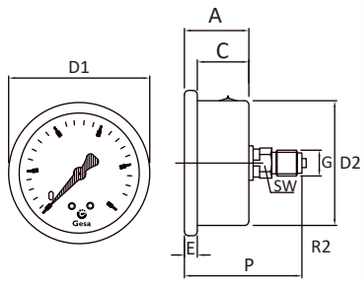


### C Bottom with back flange

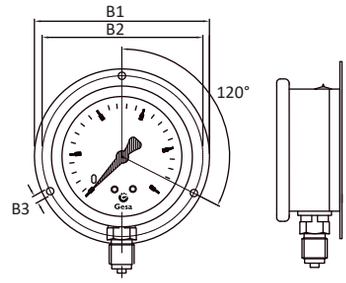


### D Back with frontal flange

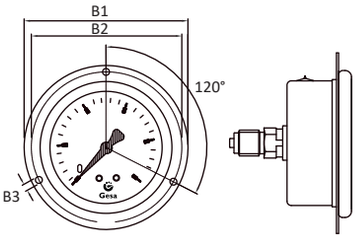


| DIMENSIONS (mm) | | | | | | | | | | | | | | | WEIGHT (g) |
|---|---|---|---|---|---|---|---|---|---|---|---|---|---|---|---|
| DN | Mounting | R1 | A | C | D1 | E | D2 | G | R2 | SW | P | B1 | B2 | B3 | |
| Ø63 | A/C | 10 | 29 | 23 | 68 | 6 | 61 | ¼ BSP | 56 | 14 | - | 86 | 80 | 3,5 | 180 |
| Ø63 | B/D | - | 29 | 23 | 68 | 6 | 61 | ¼ BSP | 56 | 14 | 58 | 86 | 80 | 3,5 | 180 |
| Ø100 | A/C | 12 | 37 | 29 | 109 | 8 | 99 | ½" BSP | 87 | 21 | - | 132 | 124 | 5 | 607 |
| Ø100 | B/D | - | 37 | 29 | 109 | 8 | 99 | ½" BSP | 87 | 21 | 77 | 132 | 124 | 5 | 607 |

## How to order

**1.Case diameter**: Ø63 Ø100

**2.Pressure range (Bar)**: -1+12 -1+24

**3.Pressure scale**: Bar/R22/R134a/R404a/R507

**4.Mounting**: A B C D

**5.Threaded connection**: ¼"BSP ¼" SAE ½"BSP

**6.Connection material**: Brass

**7.Antivibration fluid**: Glycerine 99.8%

**8.Calibration certificate traceable to ENAC**: 7 point certificate / Without certificate

| M0501 - | 1 | 2 | 3 | 4 | 5 | 6 | 7 | 8 |
|---|---|---|---|---|---|---|---|---|
| | | | | | | | | |

www.termometros.com

Order it online!



Gesa Termómetros S.L. · C/ Barrikako Bidea Pol. Ind. Igeltzera Pabellón D3 · 48610 Urduliz (Bizkaia) SPAIN
+34 94 676 63 64
info@termometros.com

# Pressure gauge for refrigeration systems with case in carbon steel

**M 05 02**

Designed for refrigeration systems. Suitable for all liquid media that will not attack copper alloy parts.



Useful for systems where the gauge is not subjected to vibrations.

Manufactured according to EN 837-1 standards.



| STANDARD PARAMETERS |
|---|
| Design: EN 837-1 |
| Closing: Threaded Display |
| Mounting: Direct: free standing on the bottom connection |
| Threaded connection: **Ø63**: 7/16"SAE; **Ø100**: 1/2"BSP (UNE-EN 10226-1) |
| IP protection: IP43 (EN 60529 / IEC 529) |
| Accuracy: Class 1.6 |
| Pressure limits: |
| Static: ¾ end of scale |
| Oscillating: ⅔ end of scale |
| Maximum: Full scale for a short period of time |
| Temperature limits: |
| Environment: -40+80°C |
| Fluid: 80°C |
| Range: **-1+12** or **-1+24** Bar |
| Scale: Bar/R22/R404a/R507 |
| Subdivision: According to standard EN 837-1 |
| Sensor element: Bourdon tube ("C" form) |

**Application:**

- **Refrigeration**
- **Air conditioning**
- **Food industry**

| MATERIALS |
|---|
| Case: Carbon steel blue (-1+12 bar) or red (-1+24 bar) |
| Bourdon tube and moving parts: Cu Alloy |
| Threaded connection: Brass |
| Display and ring: Acrylic. Display and ring are a single piece threadable to the case |
| Dial: White laquered aluminum |
| Pointer: Black laquered aluminum |
| Welding: Cu-Sn |

## A Bottom

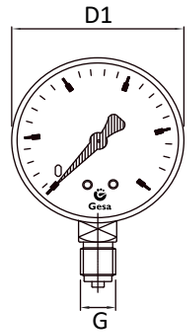


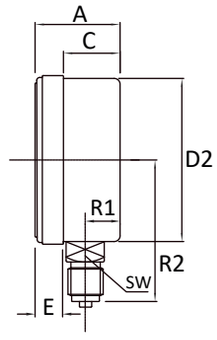


DIMENSIONS (mm) | WEIGHT (g)

| DN | Mounting | R1 | A | C | D1 | E | D2 | G | R2 | SW | |
|---|---|---|---|---|---|---|---|---|---|---|---|
| Ø63 | A | 11 | 30 | 19 | 72 | 11 | 68 | ⅛ BSPT | 55 | 14 | 121 |
| Ø100 | A | 11 | 37 | 25 | 103 | 12 | 99 | ¼ BSPT | 80 | 14 | 241 |

## How to order

**1.Case diameter**: Ø63 Ø100

**2.Pressure range (Bar)**: -1+12 -1+24

**3.Pressure scale**: Bar/R22/R404a/R507

**4.Mounting**: A B

**5.Threaded connection**: 1/2"BSP 7/16"SAE

**6.Connection material**: Brass

**7.Calibration certificate traceable to ENAC**: 7 point certificate / Without certificate

| | 1 | 2 | 3 | 4 | 5 | 6 | 7 |
|---|---|---|---|---|---|---|---|
| **M0502 -** | | | | | | | |


www.termometros.com

Order it online!

+34 94 676 63 64

info@termometros.com





Gesa Termómetros S.L. · C/ Barrikako Bidea Pol. Ind. Igeltzera Pabellón D3 · 48610 Urduliz (Bizkaia) SPAIN

# M 05 03

## All stainless steel pressure gauge for refrigeration systems

Suitable for all gaseous and liquid media that will not obstruct the pressure system or attack copper alloy parts.



Especially designed for heavy duty conditions like vibrations or quick pressure changes. Manufactured according to EN 837-1 standards.

**Application:**

- Refrigeration
- Air conditioning
- Food industry

### STANDARD PARAMETERS

- Design: EN 837-1
- Closing: Bayonet
- Mounting: See attached diagrams **A** or **B**
- Threaded connection: **½"BSP** or **¼"SAE** (UNE-EN 10226-1)
- IP protection: IP65 (EN 60529 / IEC 529)
- Accuracy: Class 1.0
- Pressure limits:
  - Static: ¾ end of scale
  - Oscillating: ⅔ end of scale
  - Maximum: Full scale for a short period of time
- Temperature limits:
  - Environment: -40+80°C
  - Fluid: 80°C
- Range: **-1+12** or **-1+24** Bar
- Scale: Bar/R22/R134a/R404a/R507
- Subdivision: According to standard EN 837-1
- Antivibration fluid: **Glycerine 99.8%** or **dry**
- Sensor element: Bourdon tube ("C" form)
- Overtemperature relief system: Upper plug

### MATERIALS

- Case: AISI 304 Stainless steel
- Bourdon tube and moving parts: AISI 316 Stainless steel
- Threaded connection: AISI 316 Stainless steel
- Display: Safety glass
- Dial: White laquered aluminum
- Pointer: Black laquered aluminum
- Welding: TIG welding
- Overtemperature relief plug: Neoprene

### A Bottom

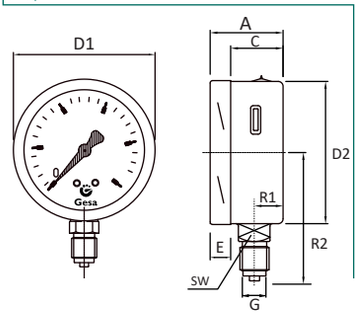


### B Back

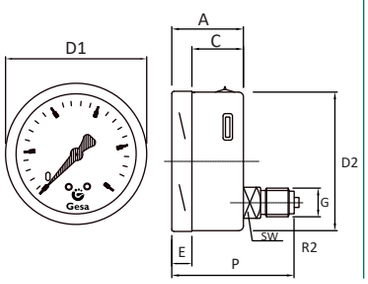


| DIMENSIONS (mm) | | | | | | | | | | | WEIGHT (g) |
|---|---|---|---|---|---|---|---|---|---|---|---|
| **DN** | **Mounting** | **R1** | **A** | **C** | **D1** | **E** | **D2** | **G** | **R2** | **SW** | |
| Ø100 | A | 16 | 49 | 32 | 101 | 17 | 99 | ½" BSP | 83 | 22 | 575 |
| Ø100 | B | - | 49 | 32 | 101 | 17 | 99 | ½" BSP | 83 | 22 | 536 |

## How to order

| 1.Case diameter | 2.Pressure range (Bar) | 3.Pressure scale | 4.Mounting |
|---|---|---|---|
| Ø100 | -1+12 -1+24 | Bar/R22/R134a/R404a/R507 | A B C D |

| 5.Threaded connection | 6.Connection material | 7.Antivibration fluid | 8.Calibration certificate traceable to ENAC |
|---|---|---|---|
| ½"BSP ¼"SAE | Brass<br>AISI 316 Stainless steel | Glycerine 99.8%<br>Dry | 7 point certificate<br>Without certificate |

| | 1 | 2 | 3 | 4 | 5 | 6 | 7 | 8 |
|---|---|---|---|---|---|---|---|---|
| **M0503 -** | | | | | | | | |

www.termometros.com

Order it online!


+34 94 676 63 64
info@termometros.com





Gesa Termómetros S.L. · C/ Barrikako Bidea Pol. Ind. Igeltzera Pabellón D3 · 48610 Urduliz (Bizkaia) SPAIN

# Pressure gauge for welding

# M 06 01

Bourdon type pressure gauges completely ungreased for $O_2$ and acetylene.
Manufactured according to UNE-EN 562 standards.
Working temperature is -40+60°C.
Designed for system where fluid temperature does not exceed 60°C



## STANDARD PARAMETERS

- Design: UNE-EN 562
- Closing: Threaded display
- Mounting: See attached diagrams **A** or **B**
- Threaded connection: **Ø50**: ¼"BSP ; **Ø63**: ¼"BSP (UNE-EN 562)
- IP protection: IP44 (EN 60529 / IEC 529)
- Accuracy: Class 2.5
- Pressure limits:
  - Static: ¾ end of scale
  - Oscillating: ⅔ end of scale
  - Maximum: Full scale for a short period of time
- Temperature limits:
  - Environment: -40+60°C
  - Fluid: 60°C
- Range: **0+2.5**; **0+16**; **0+40**; **0+315** Bar
- Scale: Bar
- Subdivision: According to standard UNE-EN 562
- Sensor element: Bourdon tube(<60 Bar: Type "C"; >60 Bar: helical)

**Application:**
- **Welding**
- **Oxygen**
- **Acetylene**

## MATERIALS

- Case: Black laquered steel
- Bourdon tube and moving parts: Copper Alloy
- Threaded connection: Brass
- Display and ring: Acrylic. Display and ring are a single piece threadable to the case
- Dial: White laquered aluminum
- Pointer: Black laquered aluminum
- Welding: P<250 Bar: Cu-Sn; P>250 Bar: Cu-Ag

## A Bottom

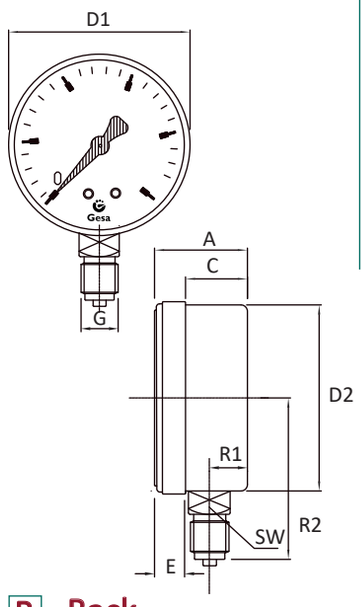


## B Back

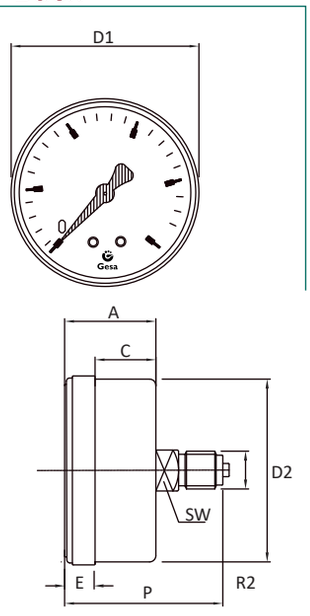


## DIMENSIONS (mm) / WEIGHT (g)

| DN | Mounting | R1 | A | C | D1 | E | D2 | G | R2 | SW | P | WEIGHT (g) |
|---|---|---|---|---|---|---|---|---|---|---|---|---|
| Ø50 | A | 10 | 28 | 17 | 57 | 12 | 52 | ¼ BSP | 46 | 14 | - | 93 |
| Ø50 | B | - | 28 | 17 | 66 | 12 | 52 | ¼ BSP | - | 14 | 46 | 98 |
| Ø63 | A | 10 | 29 | 17 | 57 | 12 | 61 | ¼ BSP | 53 | 14 | - | 118 |
| Ø63 | B | - | 29 | 17 | 66 | 12 | 61 | ¼ BSP | - | 14 | 46 | 125 |

## How to order

**1.Case diameter**: Ø50 | Ø63

**2.Pressure range (Bar)**: 0+2.5 | 0+16 | 0+40 | 0+315

**3.Pressure scale**: Bar

**4.Mounting**: A | B

**5.Threaded connection**: ¼"BSP

**6.Connection material**: Brass

**7.Calibration certificate traceable to ENAC**: 7 point certificate | Without certificate

| | 1 | 2 | 3 | 4 | 5 | 6 | 7 |
|---|---|---|---|---|---|---|---|
| **M0601 -** | | | | | | | |


www.termometros.com

Order it online!

+34 94 676 63 64

info@termometros.com





Gesa Termómetros S.L. · C/ Barrikako Bidea Pol. Ind. Igeltzera Pabellón D3 · 48610 Urduliz (Bizkaia) SPAIN

# M 07 01

## Steel case pressure gauge for ammonia

Suitable for all gaseous and liquid media that will not obstruct the pressure system or attack copper alloy parts. Useful for system that are not submited to strong vibrations.

Especially designed for pneumatics and hydraulics.

Manufactured according to EN 837-1 standards.



**Application:**
- Refrigeration
- Air conditioning
- Food industry

| STANDARD PARAMETERS |
|---|
| Design: EN 837-1 |
| Closing: Pressure adjusted |
| Mounting: See attached diagrams **A** or **B** |
| Threaded connection: ¼"BSP (UNE-EN 10226-1) |
| IP protection: IP44 (EN 60529 / IEC 529) |
| Accuracy: Class 1.6 |
| Pressure limits: |
| Static: ¾ end of scale |
| Oscillating: ⅔ end of scale |
| Maximum: Full scale for a short period of time |
| Temperature limits: |
| Environment: -40+65°C |
| Fluid: 60°C |
| Range: **-1+15** or **-1+25** Bar |
| Scale: Bar/°C for refrigerant R717 ($NH_3$) |
| Subdivision: According to standard EN 837-1 |
| Sensor element: Bourdon tube ("C" form) |

| MATERIALS |
|---|
| Case: Black laquered steel |
| Bourdon tube and moving parts: AISI 316 Stainless steel |
| Threaded connection: AISI 316 Stainless steel |
| Display: Acrylic |
| Dial: White laquered aluminum |
| Pointer: Black laquered aluminum |
| Welding: TIG welding |

**A Bottom**

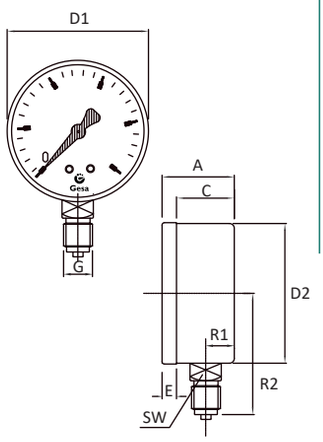


**B Back**

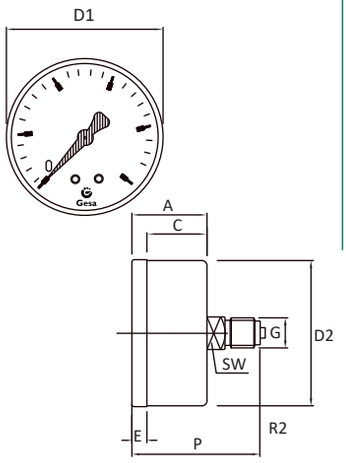


| DIMENSIONS (mm) | | | | | | | | | | | | WEIGHT (g) |
|---|---|---|---|---|---|---|---|---|---|---|---|---|
| DN | Mounting | R1 | A | C | D1 | E | D2 | G | R2 | SW | P | |
| Ø63 | A | 11 | 28 | 18 | 63 | 10 | 62 | ¼ BSP | 52 | 14 | - | 122 |
| Ø63 | B | - | 28 | 18 | 63 | 10 | 62 | ¼ BSP | - | 14 | 46 | 128 |

## How to order

**1.Case diameter**: Ø63

**2.Pressure range (Bar)**: -1+15 -1+25

**3.Pressure scale**: Bar/ ˚C R717 $NH_3$

**4.Mounting**: A B

**5.Threaded connection**: ¼"BSP

**6.Connection material**: AISI 316 Stainless steel

**7.Calibration certificate traceable to ENAC**: 7 point certificate / Without certificate

| M0701 - | 1 | 2 | 3 | 4 | 5 | 6 | 7 |
|---|---|---|---|---|---|---|---|
| | | | | | | | |

www.termometros.com

Order it online!


+34 94 676 63 64
info@termometros.com





Gesa Termómetros S.L. · C/ Barrikako Bidea Pol. Ind. Igeltzera Pabellón D3 · 48610 Urduliz (Bizkaia) SPAIN

# All stainless steel pressure gauge for ammonia

# M 07 02

Suitable for all gaseous and liquid media that will not obstruct the pressure system or attack copper alloy parts. Especially designed for refrigeration systems and ammonia.
Manufactured according to EN 837-1 standards.



## STANDARD PARAMETERS

- Design: EN 837-1
- Closing: Bayonet
- Mounting: See attached diagrams **A** or **C**
- Threaded connection: ½"BSP (UNE-EN 10226-1)
- IP protection: IP65 (EN 60529 / IEC 529)
- Accuracy: Class 1.0
- Pressure limits:
  - Static: ¾ end of scale
  - Oscillating: ⅔ end of scale
  - Maximum: Full scale for a short period of time
- Temperature limits:
  - Environment: -40+65°C
  - Fluid: 60°C
- Range: **-1+9, -1+12, -1+15** o **-1+25** Bar
- Scale: Bar/ °C for refrigerant R717 ($NH_3$)
- Subdivision: According to standard EN 837-1
- Pointer: Micrometric adjustment
- Sensor element: Bourdon tube (<60 Bar: "C" form; >60 Bar: helical)
- Pressure relief system: Blow-out disc
- Overtemperature relief system: Upper plug

## MATERIALS

- Case: AISI 304 Stainless steel
- Bourdon tube and moving parts: AISI 316 Stainless steel
- Threaded connection: AISI 316 Stainless steel
- Display: Safety glass
- Dial: White laquered aluminum
- Pointer: Black laquered aluminum
- Welding: TIG welding
- Blow-out disc and overtemperature relief plug: Neoprene

**Application:**
- Refrigeration
- Air conditioning
- Food industry

## A Bottom

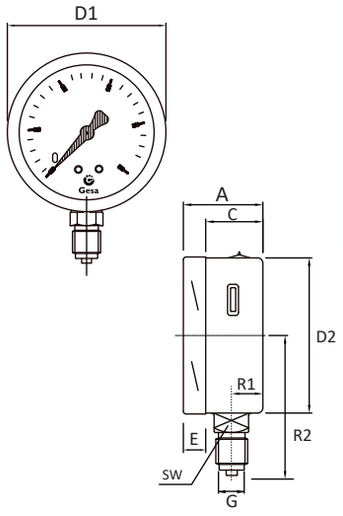


## C Bottom with back flange

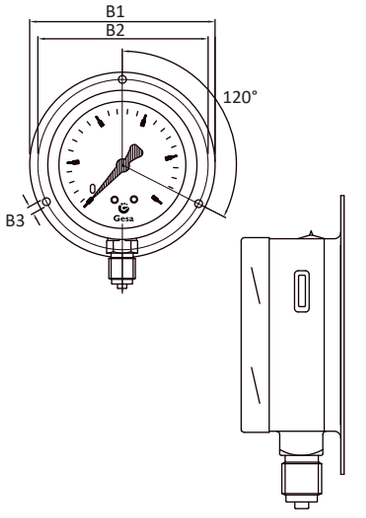


| DIMENSIONS (mm) | | | | | | | | | | | | | | | WEIGHT (g) |
|---|---|---|---|---|---|---|---|---|---|---|---|---|---|---|---|
| DN | Mounting | R1 | A | C | D1 | E | D2 | G | R2 | SW | P | B1 | B2 | B3 | |
| Ø100 | A | 16 | 49 | 32 | 101 | 17 | 99 | ½" BSP | 83 | 22 | - | - | - | - | 545 |
| Ø100 | C | 16 | 49 | 32 | 101 | 17 | 99 | ½" BSP | 83 | 22 | 86 | 132 | 124 | 5 | 566 |

## How to order

**1.Case diameter**: Ø100

**2.Pressure range (Bar)**: -1+9, -1+15, -1+12, -1+25

**3.Pressure scale**: Bar/ °C R717 $NH_3$

**4.Mounting**: A, C

**5.Threaded connection**: ½"BSP

**6.Connection material**: AISI 316 Stainless steel

**7.Calibration certificate traceable to ENAC**: 7 point certificate, Without certificate

| M0702 - | 1 | 2 | 3 | 4 | 5 | 6 | 7 |
|---|---|---|---|---|---|---|---|
| | | | | | | | |


www.termometros.com

Order it online!

+34 94 676 63 64

info@termometros.com





Gesa Termómetros S.L. · C/ Barrikako Bidea Pol. Ind. Igeltzera Pabellón D3 · 48610 Urduliz (Bizkaia) SPAIN

# M 08 01

## Safety pressure gauge with phenolic case and solid front

The rugged phenolic case gives an excellent resistance to chemical agents, harsh weather and corrosion.

It is manufactured according to EN 837-1, BS1780 y ASME B 40.1.



| STANDARD PARAMETERS |
|---|
| Design: EN 837-1, BS1780 y ASME B 40.1. |
| Closing: Safety closing |
| Mounting: See attached diagram **A** |
| Threaded connection: ½"BSP (UNE-EN 10226-1) |
| IP protection: IP55 (EN 60529 / IEC 529) |
| Accuracy: Class 1.0 (first and last 25% of the scale) / 0.5 (rest of the scale) |
| Pressure limits: |
| Static: Full scale |
| Oscillating: 90% end of scale |
| Maximum: 130% end of scale for a short period of time |
| Temperature limits: |
| Environment: -40+60°C |
| Fluid: 60°C |
| Range: **-1...0...1000** Bar |
| Scale: **Bar** or **Bar/Psi** |
| Subdivision: According to standard EN 837-1 |
| Antivibration fluid: **Glycerine 99.8%, silicone oil** or **dry** |
| Pointer: Micrometric adjustment |
| Sensor element: Bourdon tube ("C" form) |

**Application:**
- **Petrochemistry**
- **Gas facilities**

| MATERIALS |
|---|
| Case and ring: Phenolic resin (PBTB) / Polypropylene |
| Bourdon tube and moving parts: AISI 316 Stainless steel |
| Threaded connection: AISI 316 Stainless steel |
| Display: Safety glass |
| Dial: White laquered aluminum |
| Pointer: Black laquered aluminum |
| Welding: TIG welding |

### A Bottom

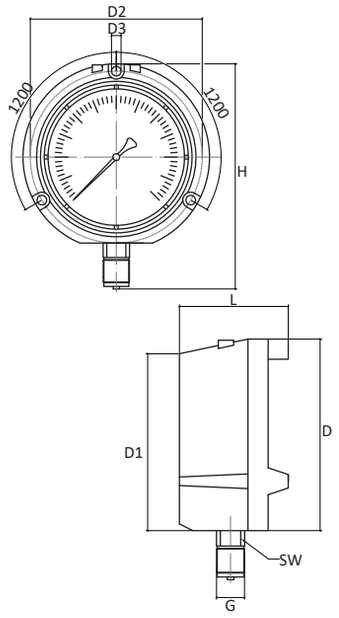


### B Back

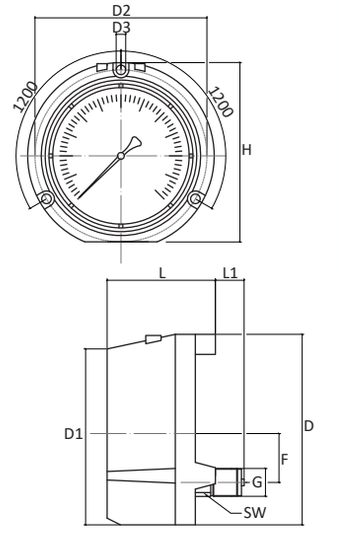


| DIMENSIONS (mm) | | | | | | | | | | | | WEIGHT (g) |
|---|---|---|---|---|---|---|---|---|---|---|---|---|
| **DN** | **Mounting** | **D** | **D1** | **D2** | **D3** | **F** | **H** | **G** | **L** | **L1** | **SW** | |
| Ø125 | **A** | 142.5 | 127 | 136.7 | 7.6 | - | 179 | ½" BSP | 81 | - | 22 | 409 |
| Ø125 | **B** | 142.5 | 127 | 136.7 | 7.6 | 44.5 | 179 | ½" BSP | 81 | 30 | 22 | 421 |

## How to order

**1.Case diameter**

Ø125

**2.Pressure range (Bar)**

| | | | | | | | |
|---|---|---|---|---|---|---|---|
| -1+0 | -1+5 | -1+24 | 0+1.6 | 0+6 | 0+25 | 0+100 | 0+400 |
| -1+0.6 | -1+9 | 0+0.6 | 0+2.5 | 0+10 | 0+40 | 0+160 | 0+600 |
| -1+3 | -1+15 | 0+1 | 0+4 | 0+16 | 0+60 | 0+250 | 0+1000 |

**3.Pressure scale**

Bar
Bar/psi

**4.Mounting**

A B

**5.Threaded connection**

½"BSP

**6.Connection material**

Brass
Stainless steelAISI 316

**7.Antivibration fluid**

Silicon oil
Glycerine
Dry

**8.Calibration certificate traceable to ENAC**

7 point certificate
Without certificate

| M0801 - | 1 | 2 | 3 | 4 | 5 | 6 | 7 | 8 |
|---|---|---|---|---|---|---|---|---|
| | | | | | | | | |


www.termometros.com

Order it online!

+34 94 676 63 64

info@termometros.com





Gesa Termómetros S.L. · C/ Barrikako Bidea Pol. Ind. Igeltzera Pabellón D3 · 48610 Urduliz (Bizkaia) SPAIN

# Pressure gauges with diaphragm in stainless steel

# SEP 101

Pressure gauges with diapraghm in AISI 316 Stainless steel. It is designed for high viscosity or corrosive fluids. Especially suitable for difficult operating conditions due to the existence of vibration or rapid pressure changes. Useful in harsh environments, and ammonia cooling systems.



## STANDARD PARAMETERS

### Pressure gauge

- Design: EN 837-1
- Closing: Bayonet
- Mounting: See attached diagram **A**
- Threaded connection: ½"BSP (UNE-EN 10226-1)
- IP protection: IP65 (EN 60529 / IEC 529)
- Accuracy: Class 1.0
- Pressure limits:
  - Static: ¾ end of scale
  - Oscillating: ⅔ end of scale
  - Maximum: Full scale for a short period of time
- Temperature limits:
  - Environment: -40+65°C
  - Fluid: 60°C
- Range: **0...25** Bar
- Scale: Bar
- Subdivision: According to standard EN 837-1
- Antivibration fluid: **Glycerine 99.8%** or **dry**
- Pointer: Micrometric adjustment
- Sensor element: Bourdon tube ("C" form)
- Pressure relief system: Blow-out disc
- Overtemperature relief system: Upper plug

### Diaphragm

Temperature limit of the transmission liquid: Up to 200°C

## MATERIALS

### Pressure gauge

- Case and ring: AISI 304 Stainless steel
- Bourdon tube and moving parts: AISI 316 Stainless steel
- Threaded connection: AISI 316 Stainless steel
- Display: Safety glass
- Dial: White laquered aluminum
- Pointer: Black laquered aluminum
- Pressure gauge welding: TIG welding
- Blow-out disc and overtemperature relief plug: Neoprene

### Diaphragm

- Body: AISI 316 Stainless steel
- Tranmission liquid: Silicon oil
- Bolts: AISI 316 Stainless steel

## Application:

- Cooling
- Air conditioning
- Food
- Treatment Plants
- Hydraulic

## A Bottom

Dimensions in mm

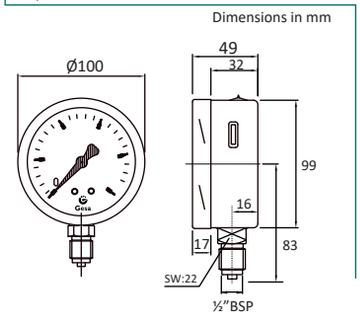


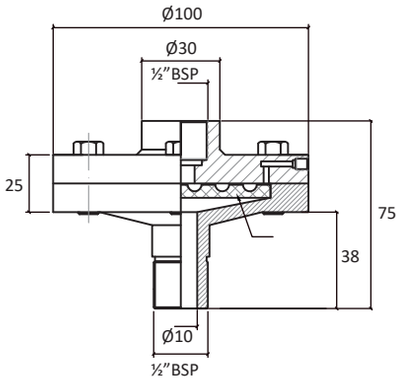


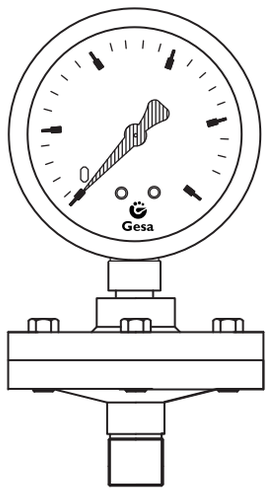


## How to order

| 1.Case diameter | 2..Pressure range (Bar) | 3.Pressure scale | 4.Mounting | 5.Threaded connection |
|---|---|---|---|---|
| Ø100 | 0+2.5 0+6 0+16<br>0+4 0+10 0+25 | Bar | A | ½"BSP |

| 6.Connection material | 7.Antivibration fluid | 8.Calibration certificate traceable to ENAC |
|---|---|---|
| AISI 316 Stainless steel | Glycerine 99.8%<br>Dry | 7 point certificate<br>Without certificate |

**SEP 101 -**

| 1 | 2 | 3 | 4 | 5 | 6 | 7 | 8 |
|---|---|---|---|---|---|---|---|
| | | | | | | | |


www.termometros.com

Order it online!

+34 94 676 63 64

info@termometros.com





Gesa Termómetros S.L. · C/ Barrikako Bidea Pol. Ind. Igeltzera Pabellón D3 · 48610 Urduliz (Bizkaia) SPAIN

# S101

## Screwed diaphragm seal with threaded connection



They are used to protect the manometer from corrosive, viscous, sediment and high temperature media.

Each medium requires a specific separator, this separator is universally used.

**Application:**

- **Plumbing**
- **Pipes**
- **Aggressive media**

### STANDARD PARAMETERS

Sealing: PTFT (up o 260°C)

Limits of use

- Max PN: 25 bar
- Pressure range: -1 to 25 bar max
- Max process temperature: 400°C

Connection threads: **¼"BSP** or **½"BSP male** or **female**

### MATERIALS

Body: AISI 316 Stainless steel

Diaphragm: AISI 316L Stainless steel Weldede to upper body

Bolts: AISI 316 Stainless steel

| System fluid | Working range | Application | Instrument range |
|---|---|---|---|
| Silicone (Low Viscosity) | -40...130°C | General | -30...50°C |
| Silicone (Alta Viscosidad) | -30...240°C | High temperatures | -20...60°C |
| Fluorocarbon oil | -30...160°C | Salt and acids | -20...50°C |
| Glycerin | -5...100°C | Food | -5...40°C |
| Propylene glycol | -30...100°C | Food | -20...40°C |

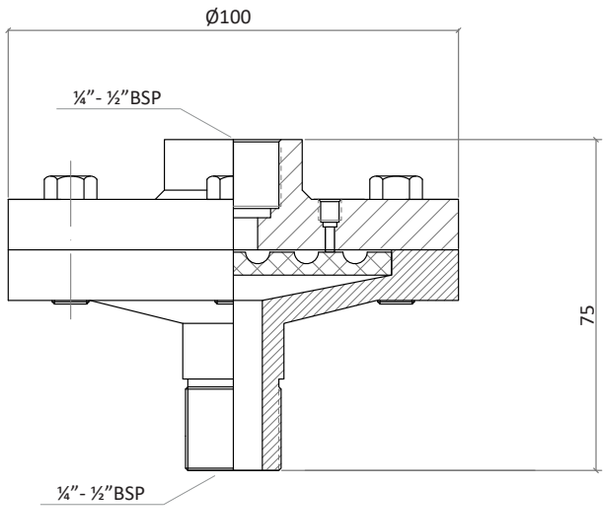


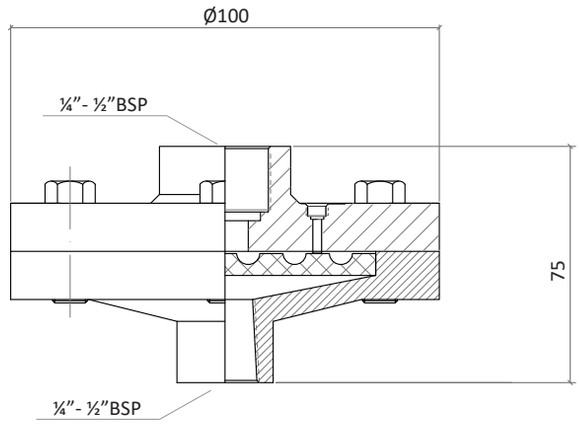




Gesa Termómetros S.L. · C/ Barrikako Bidea Pol. Ind. Igeltzera Pabellón D3 · 48610 Urduliz (Bizkaia) ESPAÑA

+34 94 676 63 64

info@termometros.com

# Welded diaphragm seal with threaded connection



They are used to protect the manometer from the medium.

Each medium requires a specific separator, this separator is universally used.

**Application:**

- **Petrochemical industry**
- **Aggressive media**
- **Water treatment**

## STANDARD PARAMETERS

Sealing: PTFT (Up to 260°C)

Limits of use

- Max PN: 100 bar
- Pressure range: -1 to 100 bar max
- Max process temperature: 400°C

Connection threads: **¼"BSP** or **½"BSP male** or **female**

## MATERIALS

Body: AISI 316 Stainless steel

Diaphragm: AISI 316L Stainless steel Weldede to upper body

Bolts: Stainless steel

| System fluid | Working range | Application | Instrument range |
|---|---|---|---|
| Silicone (Low Viscosity) | -40...130°C | General | -30...50°C |
| Silicone (Alta Viscosidad) | -30...240°C | High temperatures | -20...60°C |
| Fluorocarbon oil | -30...160°C | Salt and acids | -20...50°C |
| Glycerin | -5...100°C | Food | -5...40°C |
| Propylene glycol | -30...100°C | Food | -20...40°C |

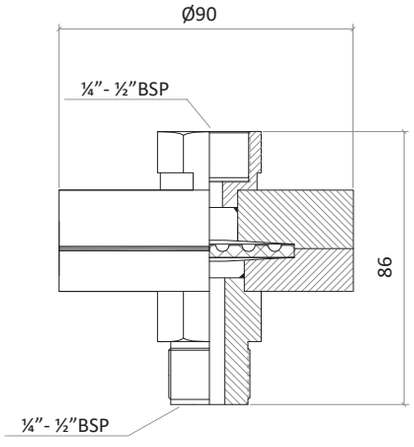


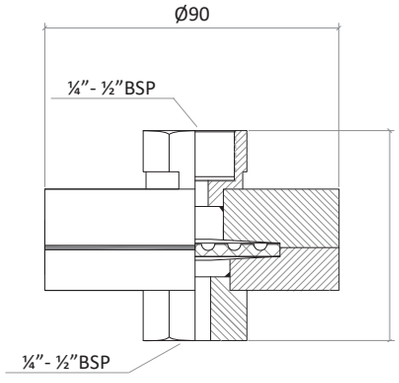




Gesa Termómetros S.L. · C/ Barrikako Bidea Pol. Ind. Igeltzera Pabellón D3 · 48610 Urduliz (Bizkaia) ESPAÑA
+34 94 676 63 64
info@termometros.com

# S103

## Welded diaphragm seal with threaded connection for high pressure



They are used to protect the manometer from the medium.

Each medium requires a specific separator, this separator is universally used.

**Application:**

- **Plumbing**
- **Pipes**
- **Aggressive media**

### STANDARD PARAMETERS

Sealing: PTFT (Up to 260°C)

Limits of use

- Max PN: 600 bar
- Pressure range: 0 to 600 bar max
- Max preocess temperature: 400°C

Connection threads: **¼"BSP** or **½"BSP male** or **female**

### MATERIALS

Body: AISI 316 Stainless steel

Diaphragm: AISI 316L Stainless steel Weldede to upper body

Bolts: Stainless steel

| System fluid | Working range | Application | Instrument range |
|---|---|---|---|
| Silicone (Low Viscosity) | -40...130°C | General | -30...50°C |
| Silicone (Alta Viscosidad) | -30...240°C | High temperatures | -20...60°C |
| Fluorocarbon oil | -30...160°C | Salt and acids | -20...50°C |
| Glycerin | -5...100°C | Food | -5...40°C |
| Propylene glycol | -30...100°C | Food | -20...40°C |

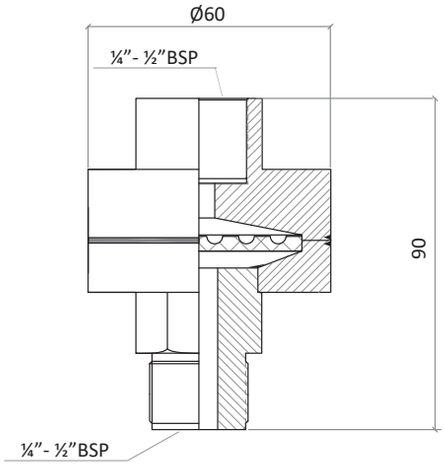


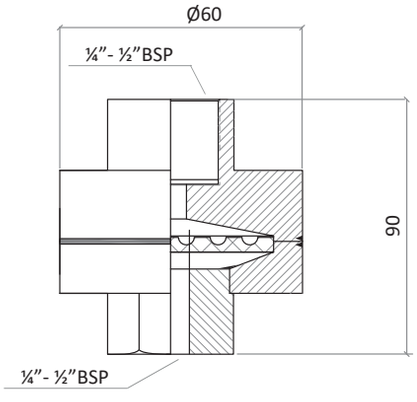




+34 94 676 63 64
info@termometros.com
Gesa Termómetros S.L. · C/ Barrikako Bidea Pol. Ind. Igeltzera Pabellón D3 · 48610 Urduliz (Bizkaia) ESPAÑA

# Sanitary diaphragm seal for food industry with flanged connection



They are used to protect the manometer from the medium.

Each medium requires a specific separator, this separator is universally used.

**Application:**

- Food industry
- Aggressive media
- Water treatment

## STANDARD PARAMETERS

Sealing: PTFT (Up to 260°C)

Limits of use

Max PN: 60 bar

Pressure range: 0 to 60 bar max

Max process temperature: 400°C

## MATERIALS

Body: AISI 316 Stainless steel

Diaphragm: Welded AISI 316L Stainless steel

Clamp: AISI 316 Stainless steel

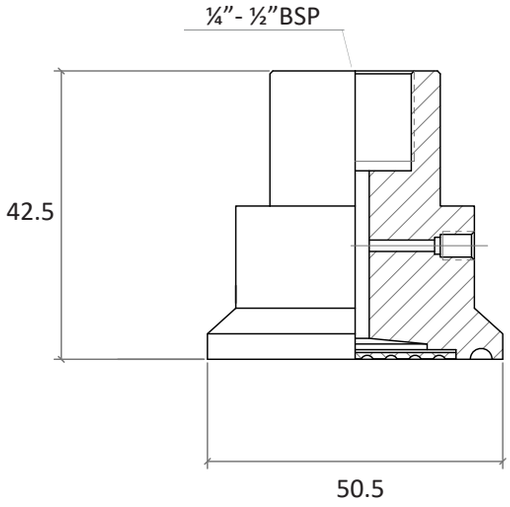


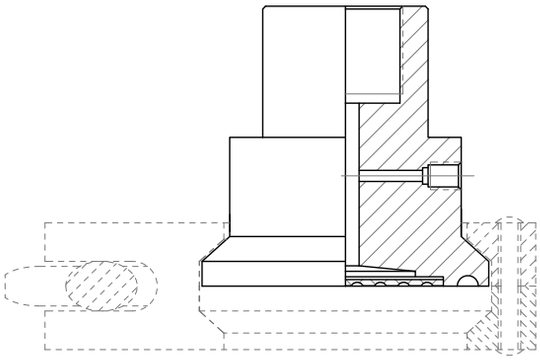



+34 94 676 63 64
info@termometros.com
Gesa Termómetros S.L. · C/ Barrikako Bidea Pol. Ind. Igeltzera Pabellón D3 · 48610 Urduliz (Bizkaia) ESPAÑA

# S121

## Plastic diaphragm seal with threaded connection

Versatile instrument for different application areas. Widely used in the facilities of water supply and wastewater treatment.

### Application:

- Petrochemical industry
- Electroplating
- Water treatment

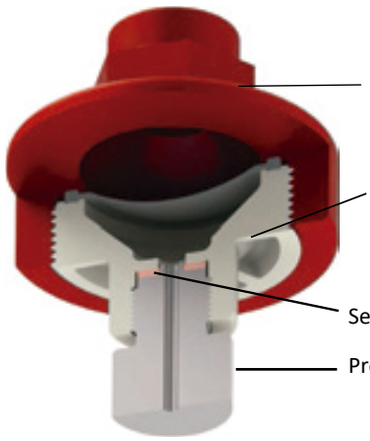


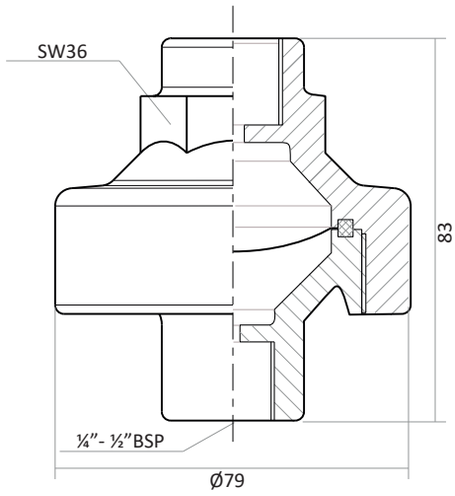


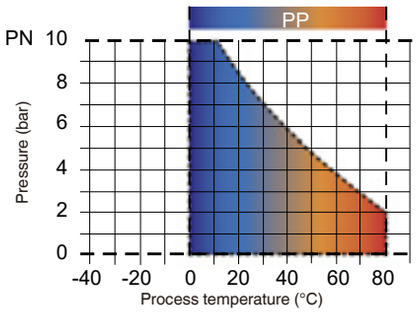


**STANDARD PARAMETERS**

Limits of use

Maximum nominal pressure: 10 bar

Pressure range: 0 to 10 bar max

Thread connection: **¼"BSP** or **½"BSP** female-female

weight: 180g

**MATERIALS**

Upper body: Polypropylene (PP)

Lower body: Polyvinyl chloride (PVC-U)

Diaphragm: **FPM** or **PTFE**



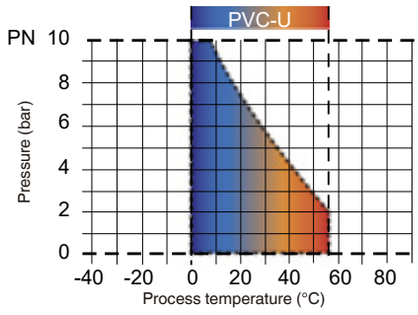


**STANDARD PARAMETERS**

Limits of use

Maximum nominal pressure: 10 bar

Pressure range: 0 to 10 bar max

Thread connection: **¼"BSP** or **½"BSP** female-female

weight: 155g

**MATERIALS**

Upper body: Polypropylene

Lower body: Polypropylene

Diaphragm: **FPM** or **PTFE**



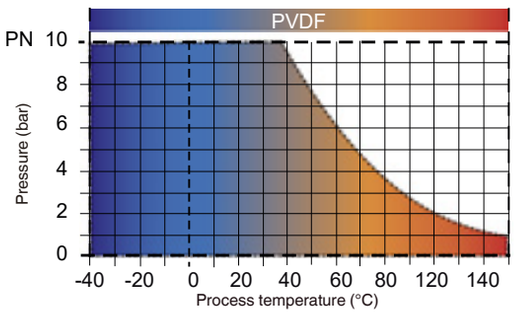


**STANDARD PARAMETERS**

Limits of use

Maximum nominal pressure: 10 bar

Pressure range: 0 to 10 bar max

Thread connection: **¼"BSP** or **½"BSP** female-female

weight: 250g

**MATERIALS**

Upper body: Polyvinylidene fluoride (PVDF)

Lower body: Polyvinylidene fluoride (PVDF)

Diaphragm: PTFE





+34 94 676 63 64
info@termometros.com
Gesa Termómetros S.L. · C/ Barrikako Bidea Pol. Ind. Igeltzera Pabellón D3 · 48610 Urduliz (Bizkaia) ESPAÑA

# TP488

## Pressure transmitter

The TP488 General Pressure Transducer consists of an OEM sensor housed in a stainless steel housing which gives it great resistance in gaseous or liquid media



### Application:

- Petrochemical industry
- Power plants

### STANDARD PARAMETERS

Type of pressure: **Gauge** or **Absolute**

Pressure range: **0...1000 bar**

Accuracy: ±0.5% full scale (FS)

Stability: <±0.3% FS/year

Thermal compensation: 0...50°C

Coefficient to 0°C: Typical: ±0.1% FS°C(<1bar) / Maximum: ±0.05 FS/°C (>1bar)

Output signal: 4~20mA DC (2 wires)

Resistance: < U-12 / 0.02(Ω)

Power supply: 12~28V DC

Electric connection: DIN43650

Connection threads: **¼"BSP**, **½"BSP** or **M20x1.5**

Limits of use

- Overpressure: 1.5 times FS
- Working temperature: -20...80°C
- Storage temperature: -40...100°C
- Max humidity: 95% RH
- Breakage pressure: 2 times FS
- IP protection: IP65
- Vibration: 10g
- Shock: 100g/11ms

| Standard | Overpressure | Break |
|---|---|---|
| 0...0.2 bar | 1.5 | 2 |
| 0...0.4 bar | 1.5 | 2 |
| 0...0.6 bar | 1.5 | 2 |
| 0...1 bar | 1.5 | 2 |
| 0...1.6 bar | 2.4 | 3.2 |
| 0...2.5 bar | 3.75 | 5 |
| 0...4 bar | 6 | 8 |
| 0...6 bar | 9 | 12 |
| 0...10 bar | 15 | 20 |
| 0...16 bar | 24 | 32 |
| 0...25 bar | 37.5 | 50 |
| 0...40 bar | 60 | 80 |
| 0...100 bar | 150 | 200 |

### MATERIALS

Body: Stainless steel 1Cr18Ni9Ti

Diaphragm: **Stainless steel 316L** or **Tantalum** welded to upper body

Pressure port: **Stainless steel 1Cr18Ni9Ti** or **Hastelloy**

O-ring: Viton

## Dimensions in mm

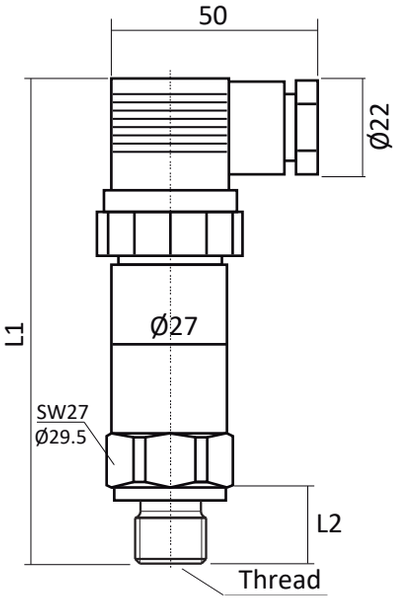


| thread | L1 | L2 |
|---|---|---|
| G ¼ | 15 | 112 |
| G ½ | 18 | 115 |
| M20x1.5 | 15 | 112 |

## Connection diagram

4 pins according to DIN 43650

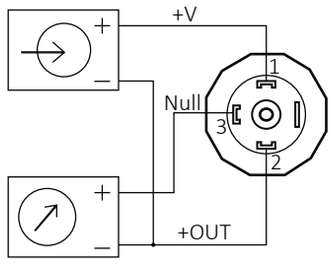


Gesa Termómetros S.L. · C/ Barrikako Bidea Pol. Ind. Igeltzera Pabellón D3 · 48610 Urduliz (Bizkaia) ESPAÑA

+34 94 676 63 64

info@termometros.com

# Accesories



## Vibrations

In systems subjected to severe vibrations it is necessary that the gauge pointer does not vibrate and prevent reliable pressure reading. To avoid it the manometer is filled with a liquid having certain viscosity which prevents the pointer vibration. The most common liquids are glycerine and silicon oil.



Glycerine or Silicon oil

## Overpressure

In cases where the gauge must be installed in facilities subjected to great pressure. It is desirable to include a pressure limiting valve which prevents overpressure damaging the pressure gauge.



Pressure limiter

## Pulsation

Processes in which significant increases and pressure drops require parts to cushion these sudden changes that can damage the instrument and cause leakage.



Damper pressure

## Overheating

Temperatures in some of the systems subject to measurement can damage internal components of the gauge, so it is advisable to use heat sinks to ensure the operability of the instrument.

There are several accessories that meet this function, these are the most common.



Cooling tower



Coil damper



Capilar

## Isolation

For installations where continuous pressure monitoring is not required, the use of valves to separate the pressure gauge system is recommended, either because the liquid can attack the internal parts in long exposures or because the use of the instrument alters the normal process operation.



Valve



Gesa Termómetros S.L. · C/ Barrikako Bidea Pol. Ind. Igeltzera Pabellón D3 · 48610 Urduliz (Bizkaia) SPAIN

+34 94 676 63 64

info@termometros.com

## Pressure limiter



The pressure limiter protects the instrument from pressures that exceed their limit of security.
They allow the use of specialized pressure gauges in systems with large pressure changes. The limiter can be adjusted to the maximum pressure by the pressure gauge and supported when it is exceeded the limiter blocks the duct protecting the pressure gauge.

**STANDARD PARAMETERS**

- Maximum pressure supported: 600 Bar
- Temperature of the fluid: -40 to 120°C
- Instrument connection: ½"BSP Female
- Process connection: ½"BSP Male
- Degreased for $O_2$: Up to 50 Bar and 60°C

**MATERIALS**

- Body and wetted parts: AISI 316 Stainless steel
- Gasket/O-ring: Viton

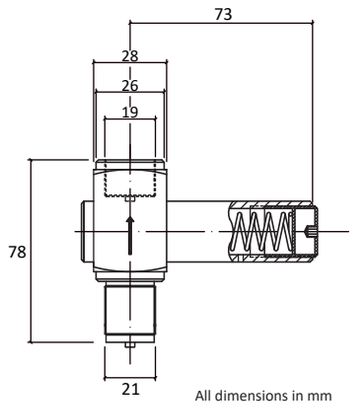


All dimensions in mm

**How to order**

| 1.Model | 2.Degreased for $O_2$ |
|---|---|
| Bellows (200 mbar to 4 Bar) | Yes |
| Piston (6 Bar to 400 Bar) | No |

**M0901-** [1] [2]

## Cooling tower



Designed to protect the gauge of the high process temperatures. The air cools the liquid in contact with the surface

**STANDARD PARAMETERS**

- Maximum pressure supported: 1000 Bar
- Maximum working pressure: 300°C
- Instrument connection: ¼"NPT Female
- Process connection: ¼"NPT Male

**MATERIALS**

- Body and wetted parts: AISI 316 Stainless steel

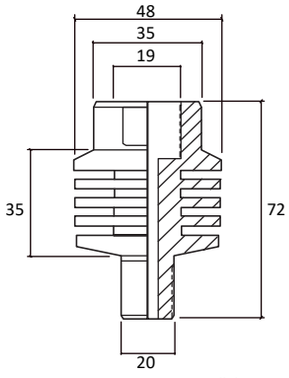


All dimensions in mm

**How to order** **Reference: M0903**

## Cooling tower



Designed to protect the gauge of the high process temperatures. The air cools the liquid in contact with the surface

**STANDARD PARAMETERS**

- Maximum pressure supported: 1000 Bar
- Maximum working pressure: 300°C
- Instrument connection: ¼"NPT Female
- Process connection: ¼"NPT Male

**MATERIALS**

- Body and wetted parts: AISI 316 Stainless steel

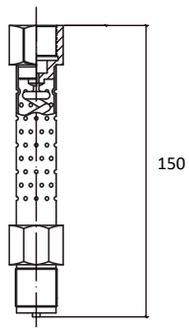


**How to order** **Reference: M0904**



Gesa Termómetros S.L. · C/ Barrikako Bidea Pol. Ind. Igeltzera Pabellón D3 · 48610 Urduliz (Bizkaia) SPAIN

Order it online at www.termometros.com
+34 94 676 63 64
info@termometros.com

## Coil damper



Designed to protect the gauge from media at high temperatures, like steam. Also to reduce the effect of sudden changes in pressure. For initial installation must fill the siphon with water or other equivalent liquid

**STANDARD PARAMETERS**

Maximum pressure supported: 12 Bar
Temperature of the fluid: -40 to 120°C
Instrument connection: Female
Process connection: Male

**MATERIALS**

Body and wetted parts: AISI 316 Stainless steel

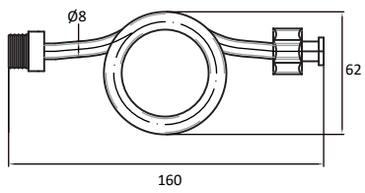


All dimensions in mm

**How to order**

**1.Instrument connection / process**

½"BSP Female / Male
¼"BSP Female / Male
⅜"BSP Female / Male

**M0902 -** 1 [ ]

## Capillary extension



Designed to connect the gauge to a remote system and perform remote readings, it also cools the system´s filling liquid providing protection to gauge. For installation it requires the measuring instrument available a flange or rim for paneling or a support for the extension

**STANDARD PARAMETERS**

Maximum pressure supported: 600 Bar
Temperature of the fluid: -40 to 120°C
Instrument connection: ¼"BSP Female
Threaded connection: ¼"BSP Male
Capillary length: **1m, 1.5m, 2m** or **2.5m**

**MATERIALS**

Body and wetted parts: AISI 316 Stainless steel

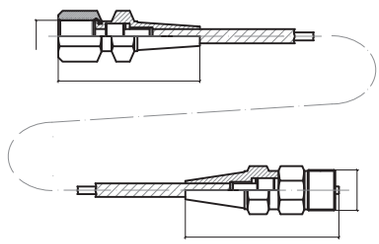

**How to order**

**Reference: M0905**

## Pointer dampener




Designed to protect pressure measuring instruments from pulsating pressure applications. Sudden pressure changes are damped before they reach the sensing element, protecting it from high stress. It makes readings easier and prolongs the life of the instrument.

**STANDARD PARAMETERS**

Maximum pressure supported: 400 Bar (6000psi)
Temperature of the fluid: -25 to 200°C
Instrument connection: ½"BSP Female
Threaded connection: ½"BSP Male

**MATERIALS**

Body and wetted parts: **AISI 316 Stainless steel** or **brass**
Adjustment screw: AISI 316 Stainless steel Gasket: Viton

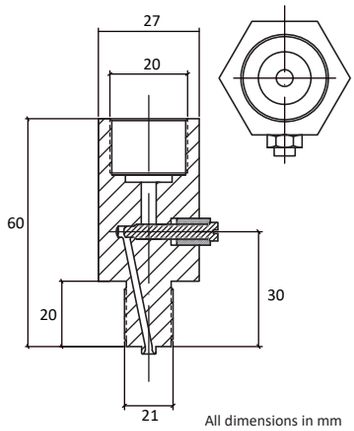


All dimensions in mm

**How to order**

**Reference: M0906**

Order it online at www.termometros.com
+34 94 676 63 64
info@termometros.com



Gesa Termómetros S.L. · C/ Barrikako Bidea Pol. Ind. Igeltzera Pabellón D3 · 48610 Urduliz (Bizkaia) SPAIN

# PRESIÓN
## PRESSION
## PRESSURE

# Brass nickel plated ball valves

V 01 25

The ball valves PN 20/25, have been constructed in accordance with the following European Standards:

- **UNE EN ISO 228**
- **UNE EN 22768**

The most frequent applications of the ball valve are opening/closing.

It is not advisable to use them in partially open service for a long time under conditions of high pressure drop across the valve.





## STANDARD PARAMETERS

Structure: See attached diagrams **A** or **B**

Handle: Lever

Axis: Antileak system

IP protection: IP56

Usage limits:

Maximum nominal pressure: 20-25 bar

Working temperature: -20 to 150°C ( Without steam )

Threaded connection: ¼"BSP, ⅜"BSP, ½"BSP, ¾"BSP, 1"BSP, 1 ¼"BSP, 1 ½"BSP or 2"BSP

## MATERIALS

Body: Brass nickel plated

Handle: Stainless steel AISI 304 and plastic injected with rough texture.

**Application:**

- Plumbing
- Irrigation
- Pipes
- Circuits

### A Female - Female

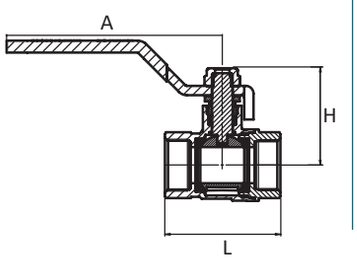


### B Male - Female

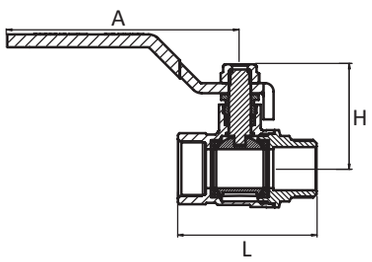


| DIMENSIONS (mm) | | | | | | WEIGHT (g) |
|---|---|---|---|---|---|---|
| **Structure** | **Threads** | **Max PN** | **A** | **L** | **H** | |
| Female - Female | ¼"BSP | 20 bar | 83 | 36.7 | 31.5 | 126 |
| | ⅜"BSP | 20 bar | 83 | 39.8 | 31.5 | 147 |
| | ½"BSP | 25 bar | 83 | 43.6 | 37.9 | 153 |
| | ¾"BSP | 25 bar | 96 | 50 | 38.7 | 209 |
| | 1"BSP | 25 bar | 106 | 55.5 | 48.3 | 329 |
| | 1 ¼"BSP | 25 bar | 134 | 69.3 | 54 | 512 |
| | 1 ½"BSP | 25 bar | 141 | 78.3 | 67.5 | 737 |
| | 2"BSP | 25bar | 165 | 94 | 72.5 | 1160 |
| Male- Female | ¼"BSP | 20 bar | 85 | 42.9 | 31.5 | 130 |
| | ⅜"BSP | 20 bar | 85 | 43.7 | 31.5 | 153 |
| | ½"BSP | 25 bar | 83 | 49.3 | 37.9 | 162 |
| | ¾"BSP | 25 bar | 97 | 55.9 | 38.7 | 219 |

## How to order

**1.Structure**

A B

**2.Threaded connection**

¼"BSP ¾"BSP 1 ½"BSP
⅜"BSP 1"BSP 2"BSP
½"BSP 1 ¼"BSP

V0125 - [1] [2]

www.termometros.com

Order it online!

+34 94 676 63 64

info@termometros.com



Gesa Termómetros S.L. · C/ Barrikako Bidea Pol. Ind. Igeltzera Pabellón D3 · 48610 Urduliz (Bizkaia) ESPAÑA

# VP 03 25

## Brass nickel plated Ball valve for pressure gauges

Useful to isolate the pressure gauge from the system.
The most common applications of this ball valve are opening and closing.
It is not recommended to use them in partly open services for long periods of time and under high pressure drops.





### STANDARD PARAMETERS

Structure: See attached diagrams **A** or **B**

Handle: Lever

Axis: Antileak system

IP protection: IP56

Usage limits:

- Maximum nominal pressure: 25 bar
- Working temperature: -20 to 50°C (Without steam)

Threaded connection: ¼"BSP, ⅜"BSP or ½"BSP

### MATERIALS

Body: Brass nickel plated

Handle: Polyethylene

**Application:**

- Plumbing
- Irrigation
- Pipes
- Circuits

### A Female - Female

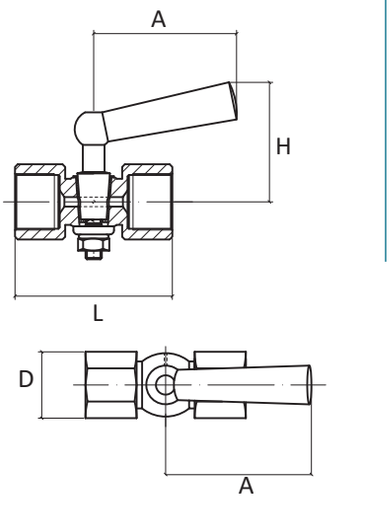


### B Male - Female

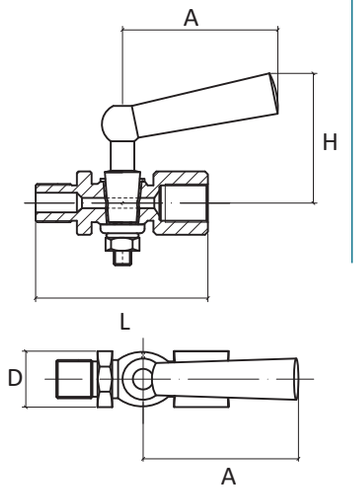


| DIMENSIONS (mm) | | | | | | | WEIGHT (g) |
|---|---|---|---|---|---|---|---|
| **Structure** | **Threads** | **Max PN** | **A** | **L** | **H** | **D** | |
| Female - Female | ¼"BSP | 25 bar | 60 | 57.9 | 50 | 19 | 105 |
| | ⅜"BSP | 25 bar | 60 | 58.6 | 50 | 21.1 | 130 |
| | ½"BSP | 25 bar | 60 | 57.9 | 50 | 24.5 | 150 |
| Male- Female | ¼"BSP | 25 bar | 60 | 57.9 | 50 | 19 | 111 |
| | ⅜"BSP | 25 bar | 60 | 58.6 | 50 | 21.1 | 134 |
| | ½"BSP | 25 bar | 60 | 57.9 | 50 | 24.5 | 145 |

## How to order

**1.Structure** — **2.Threaded connection**

A B ⇨ ¼"BSP ⅜"BSP ½"BSP ⇨ **VP0325 -** [1] [2]

www.termometros.com


Gesa Termómetros S.L. · C/ Barrikako Bidea Pol. Ind. Igeltzera Pabellón D3 · 48610 Urduliz (Bizkaia) ESPAÑA


V2

Order it online!


+34 94 676 63 64

info@termometros.com

# Chromed brass mini valve

**MV 01 16**

Opening / Closing: The most common application of these Valves is in installations where the flow is interrupted regularly

It is not recommended to use them in partly open services for long periods of time and under high pressure drops.





**Application:**
- **Plumbing**
- **Irrigation**
- **Pipes**
- **Circuits**

## STANDARD PARAMETERS

Structure: See attached diagrams **A** or **B**

Handle: Short lever

IP protection: IP56

Usage limits:

Maximum nominal pressure: 16 bar

Working temperature: 0 to 90°C (Without steam)

Threaded connection: ¼"BSP, ⅜"BSP or ½"BSP

## MATERIALS

Body: Chromed brass

Handle: Epoxy coated brass

### A Female - Female

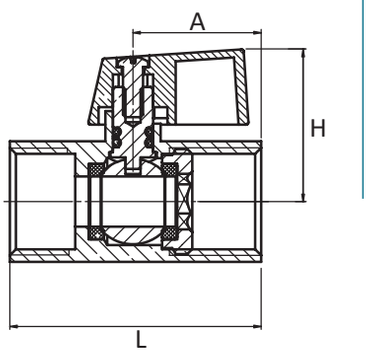


### B Male - Female

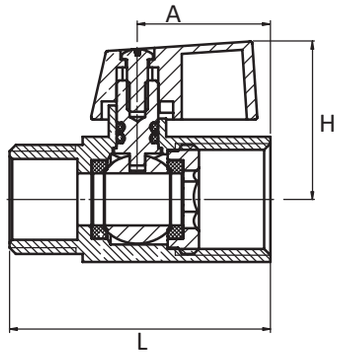


| DIMENSIONS (mm) | | | | | | WEIGHT (g) |
|---|---|---|---|---|---|---|
| **Structure** | **Threads** | **Max PN** | **A** | **L** | **H** | |
| Female - Female | ¼"BSP | 16 bar | 23 | 43 | 28.5 | 110 |
| | ⅜"BSP | 16 bar | 23 | 44.5 | 28.5 | 110 |
| | ½"BSP | 16 bar | 26 | 50 | 30 | 125 |
| Male- Female | ¼"BSP | 16 bar | 23 | 44.5 | 28.5 | 95 |
| | ⅜"BSP | 16 bar | 23 | 44.5 | 28.5 | 95 |
| | ½"BSP | 16 bar | 25 | 50 | 28.5 | 114 |

## How to order

**1.Structure**

A B

**2.Threaded connection**

¼"BSP ⅜"BSP ½"BSP ¾"BSP 1"BSP 1 ¼"BSP 1 ½"BSP 2"BSP

**MV0116 -** 1 | 2

www.termometros.com

Order it online!

+34 94 676 63 64
info@termometros.com

V3

Gesa Termómetros S.L. · C/ Barrikako Bidea Pol. Ind. Igeltzera Pabellón D3 · 48610 Urduliz (Bizkaia) ESPAÑA

# TEMPERATURA
# TEMPÉRATURE
# TEMPERATURE

## Termómetros de vidrio
## Thermomètres en verre
## Glass thermometers

# V-shaped thermometer

C 01 01

Liquid expansion thermometers for temperatures from -60°C to 600°C.
These instruments are very tough, easy to install and reliable. They resist extreme working conditions: vibrations, humidity, outdoors conditions, aggressive media like sea water or ammonia.
Useful to control fluid temperature in pipes or tanks from ship engines, refrigeration systems, boilers, HVAC systems, etc.



## STANDARD PARAMETERS

Design: DIN 16181/16182/16185/16186/16189/16190/16195

Structure: The glass insert is secured by an aluminum case where the temperature range is printed. The metallic stem is fixed into the system by male or female thread or Bolt.

Case dimension (H): **110, 150 or 200mm**

Mounting: See attached diagrams **A** , **B** or **C**

Connection system: **Male** or **female thread** or **bolt**

Threads: **Standard BSP, metrics** or **NPT**

Stem length (L), including thread: **25-500mm**

Stem diameter (Ø) : 10mm (optional 8mm)

Range: Aluminium case:**-60...0...600°C / Polyamide case: -60...0...200°C**

Scale: **°C printed on the right side of the case** or **double scale °C/°F**

## MATERIALS

Case: **Anodized aluminium gold or silver coloured / polyamide**

Insert: Prismatic glass with white strip for T<450°C and Round glass with yellow back for T>450°C

Thread and Stem: **Brass, Steel, Stainless steel AISI 304, AISI 316** or **316L**

Thermometric liquid: **Blue** or **red alcohol** for T<200°C / Mercury for T>200°C

**Application:**
- **Heating**
- **Boilers**
- **Naval Sector**

| DIMENSIONS(mm) | | | | | | | | WEIGHT (g) | DIN |
|---|---|---|---|---|---|---|---|---|---|
| Mounting | H | A | B | C | D1 | D2 | Ø | | |
| Straight | 110 | 36 | 60 | 17 | 20 | - | 10 | 230 | DIN 16181 |
| | 150 | 36 | 90 | 17.5 | 20 | - | 10 | 285 | DIN 16185 |
| | 200 | 36 | 130 | 17.5 | 20 | - | 10 | 320 | DIN 16189 |
| Angle 90° | 110 | 36 | 60 | 17 | - | 48 | 10 | 230 | DIN 16182 |
| | 150 | 36 | 90 | 17 | - | 48 | 10 | 275 | DIN 16186 |
| | 200 | 36 | 130 | 17 | - | 48 | 10 | 310 | DIN 16190 |
| Angle 135° | 110 | 36 | 60 | 17 | 20 | - | 10 | 230 | - |
| | 150 | 36 | 90 | 17.5 | 20 | - | 10 | 275 | - |
| | 200 | 36 | 130 | 17.5 | 20 | - | 10 | 310 | DIN 16191 |

## A Straight

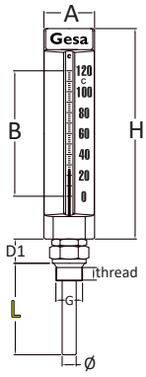


## B Angle 90°

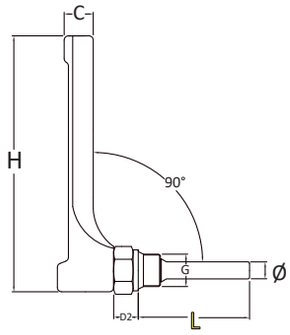


## C Angle 135°

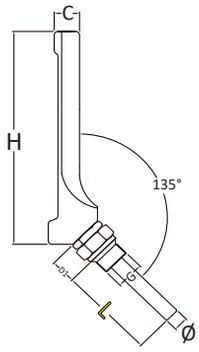


## How to order

**1.Case size in mm (H)**
110
150
200

**2. Case material**
Aluminium
Polyamide

**3.Case Color**
Gold
Silver

**4.Mounting**
A B C

**5.Temperature Range (°C)**
-10+50 0+120 0+400
-30+50 0+160 0+500
0+60 0+200 0+600
0+100 0+300

**6.Temperature scale**
Single ơC
Double ơC / ơF

## Temperature range according to DIN 16195

| Tmp. in °C | H | Subdivision °C/line | Maximum error | Liquid |
|---|---|---|---|---|
| -60+40 | 110 | 2 | 2 | Alcohol |
| | 150 | 1 | | |
| | 200 | 1 | | |
| -30+50 | 110 | 1 | 2 | Alcohol or Mercury |
| | 150 | | 2 | |
| | 200 | | 1 | |
| 0+60 | 110 | 1 | 2 | |
| | 150 | | 2 | |
| | 200 | | 1 | |
| 0+100 0+120 | 110 | 2 | 2 | |
| | 150 | 1 | 2 | |
| | 200 | 1 | 1 | |
| 0+160 0+200 | 110 150 200 | 2 | 2 | |
| 0+300 | 150 200 | 2 | 2 | Mercury |
| 0+400 | | 5 | 5 | |
| 0+500 | | 10 | 5 | |
| 0+600 | | 10 | 5 | |

**7.Thermometric liquid**
Blue alcohol
Red alcohol
Mercury

**8.Stem length in mm (L), including thread**
25 40 55 70 85 110 135 200 270 400
30 45 60 75 90 120 140 220 300 450
35 50 63 80 100 130 160 250 350 500

**9.Stem diameter in mm (Ø)**
Ø10
Ø8

**10.Stem material**
Brass
Chromed carbon steel — Stainless st. AISI 304
Galvanized carbon steel — Stainless st. AISI 316

**11.Threads**
½" BSP male — ¾" BSP male — M18x150male — Female crazy nut
½" BSPT male — ¾" NPT male — M20X150 male — Without threaded connection
½" NPT male — Bolt Ø16 mm — M22X150 male — More threads on demand
⅜" BSP male — Bolt Ø18 mm — M27X200 male

**12.Logo**
GESA
Without Logo

**13.Calibration certificate traceable to ENAC**
3 points — 6 points
4 points — 7 points
5 points — Without certificate

| | 1 | 2 | 3 | 4 | 5 | 6 | 7 | 8 | 9 | 10 | 11 | 12 | 13 |
|---|---|---|---|---|---|---|---|---|---|---|---|---|---|
| C0101 - | | | | | | | | | | | | | |


www.termometros.com
Order it online!
+34 94 676 63 64
info@termometros.com





Gesa Termómetros S.L. · C/ Barrikako Bidea Pol. Ind. Igeltzera Pabellón D3 · 48610 Urduliz (Bizkaia) ESPAÑA

# C 02 01

## V-shaped thermometer: Glass inserts

Liquid expansion thermometers for temperatures from -60°C to 600°C.
These replacement glass inserts for the industrial thermometers C0101 are very tough, easy to install and reliable.



### STANDARD PARAMETERS

Design: DIN 16181/16182/16185/16186/16189/16190/16195

Structure: The glass insert is secured by an aluminum case where the temperature range is printed. The metallic stem is fixed into the system by male or female thread or through a bolt

Dimension according to the case size (H): **110**, **150** or **200mm**

Mounting: See attached diagrams **A**, **B** or **C**

Stem length (**L**), including thread: **25-500mm**

Insert diameter (Ø) : 6.25mm

Range: **-60...0...600°C**

Scale:**°C** or **double scale °C and °F**

### MATERIALS

Insert: Prismatic glass with white strip for T<450°C and Round glass with yellow back for T>450°C

Thermometric liquid: Blue or red alcohol for T<200°C / Mercury for T>200°C

**A** Straight

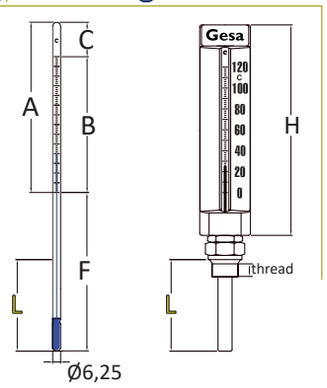


**B** Angle 90°

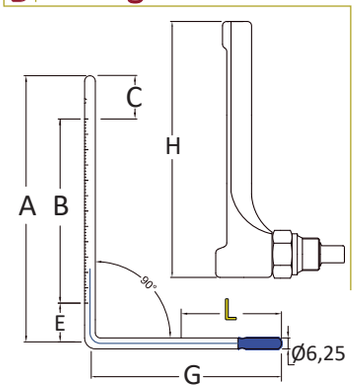


**C** Angle 135°

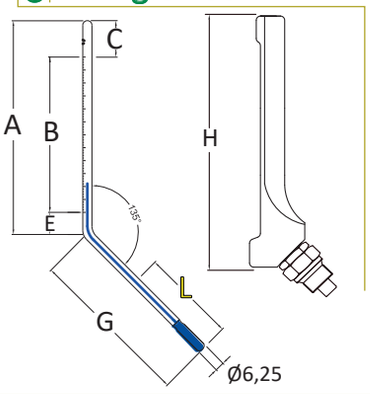


| DIMENSIONS(mm) | | | | | | WEIGHT (g) | DIN |
|---|---|---|---|---|---|---|---|
| Mounting | H | A | B | C | E | | |
| Straight | 110 | 76 | 60 | 16 | - | 11 | DIN 16181 |
| | 150 | 113 | 90 | 23 | - | 13 | DIN 16185 |
| | 200 | 153 | 130 | 23 | - | 18 | DIN 16189 |
| Angle 90° | 110 | 86 | 60 | 15 | 11 | 11 | DIN 16182 |
| | 150 | 124 | 90 | 18 | 16 | 13 | DIN 16186 |
| | 200 | 174 | 130 | 24 | 20 | 18 | DIN 16190 |
| Angle 135° | 110 | 86 | 60 | 15 | 11 | 11 | - |
| | 150 | 124 | 90 | 18 | 16 | 13 | - |
| | 200 | 174 | 130 | 24 | 20 | 18 | DIN 16191 |

**Application:**

- **Heating**
- **Boilers**
- **Naval Sector**

### Liquid operation limits

| | | Minimum operation temp. (°C) | Maximum operation temp. (°C) |
|---|---|---|---|
| Mercury | Hg | -38 | +800 |
| Ethanol | $C_2H_6O$ | -110 | +110 |
| Toluene | $C_7H_6$ | -115 | +135 |
| Etil Benzoate | $C_{12}H_{16}O_2$ | -40 | +220 |

### Stem lenght

| | H=110mm | | H=150mm | | H=200mm | |
|---|---|---|---|---|---|---|
| L | F | G | F | G | F | G |
| 40 | 81 | 66 | 87 | 66 | 97 | 66 |
| 63 | 104 | 89 | 110 | 89 | 120 | 89 |
| 100 | 141 | 126 | 147 | 126 | 157 | 126 |
| 160 | 201 | 186 | 207 | 186 | 217 | 186 |
| 200 | 241 | 226 | 247 | 226 | 257 | 226 |

### Temperature range according to DIN 16195

| Tmp. in °C | H | Subdivision °C/line | Maximum error | Líquid |
|---|---|---|---|---|
| -60+40 | 110 | 2 | 2 | Alcohol |
| | 150 | 1 | | |
| | 200 | 1 | | |
| -30+50 | 110 | 1 | 2 | Alcohol or mercury |
| | 150 | | 2 | |
| | 200 | | 1 | |
| 0+60 | 110 | 1 | 2 | |
| | 150 | | 2 | |
| | 200 | | 1 | |
| 0+100 0+120 | 110 | 2 | 2 | |
| | 150 | 1 | 2 | |
| | 200 | 1 | 1 | |
| 0+160 0+200 | 110 | 2 | 2 | |
| | 150 | | | |
| | 200 | | | |
| 0+300 | 150 | 2 | 2 | Mercury |
| 0+400 | | 5 | 5 | |
| 0+500 | 200 | 10 | 5 | |
| 0+600 | | 10 | 5 | |

## How to order

**1.Case dimension (H)**
110
150
200

**2.Mounting**
A B C

**3.Temperature range (°C)**
-10+50 0+100 0+200 0+500
-30+50 0+120 0+300 0+600
0+60 0+160 0+400

**4.Temperature scale**
Single ɑC
Double ɑC / ɑF

**5.Termometric liquid**
Blue alcohol
Red alcohol
Mercury

**6.Stem length in mm (L), including thread**
25 40 55 70 85 110 135 200 270 400
30 45 60 75 90 120 140 220 300 450
35 50 63 80 100 130 160 250 350 500

**7.Calibration certificate traceable to ENAC**
3 points 6 points
4 points 7 points
5 points Without certificate

| 1 | 2 | 3 | 4 | 5 | 6 | 7 |
|---|---|---|---|---|---|---|
| C0201 - | | | | | | |


www.termometros.com
Order it online!
+34 94 676 63 64
info@termometros.com





Gesa Termómetros S.L. · C/ Barrikako Bidea Pol. Ind. Igeltzera Pabellón D3 · 48610 Urduliz (Bizkaia) ESPAÑA

# V-shaped thermometer: Protection sheaths

They are used to enhance safety at the point where the thermometer is fixed to the facility. They are required when operating pressure is over 16 bar.These accessories also prevent facility stoppages whenever the thermometer has to be replaced. They resist extreme hard conditions: vibrations, humidity, high temperature, outdoor installations.



## STANDARD PARAMETERS

Design: DIN 16179

Structure:

**BD**- Two welded pieces, female connection to the thermometer and male connection to the process
**BE**- A single piece, female connection to the thermometer and male connection to the process
BS- A single piece, female connection to the thermometer and welded to the process
**CD**-Two welded pieces, male connection to the thermometer and male connection to the process
**CE**- A single piece, male connection to the thermometer and male connection to the process
**CS**- A single piece, male connection to the thermometer and welded to the process

Connection system: **Male thread** or **Welded**

Threads: **Standard BSP**, **metrics** or **NPT**

Stem length (**L**), including thread: **25-500mm**

Stem diameter (Ø): **Ø12, Ø13, Ø14, Ø17 or Ø22**

## MATERIALS

**Brass / Carbon steel /Stainless steel AISI 304, 316** or **316L**

## Sheath Mounting

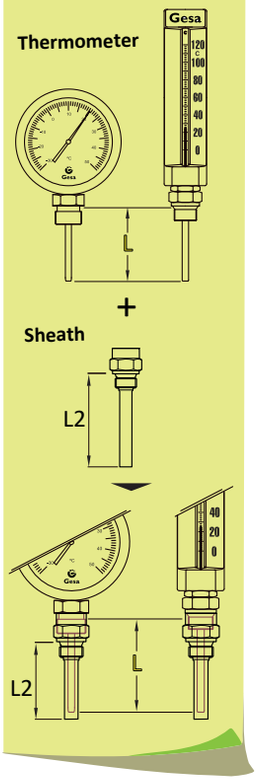


## DIMENSIONS(mm)

| | | d1 | d3 | d4 | d5 | d7 | r1 | s1 | h1 | h2 | h3 | b1 | b2 | sw | L2 |
|---|---|---|---|---|---|---|---|---|---|---|---|---|---|---|---|
| BD | M20x1.5 | 25 | 27 | - | 13 | - | 2 | 22 | 12 | - | 16 | 25 | 27 | L - 18 | |
| | ½"BSP | | | | | | | | | | | | | | |
| | M27x2 | 32 | 32 | - | 13 | - | 2 | 26 | 15 | - | 20 | 25 | 32 | L - 22 | |
| | ¾"BSP | | | | | | | | | | | | | | |
| BE | M20x1.5 | 25 | 27 | - | 17 | 8,5 | 7,5 | 22 | 12 | - | 16 | 25 | 27 | L - 11 | |
| | ½"BSP | | | | | | | | | | | | | | |
| | M27x2 | 32 | 32 | - | 22 | 9,5 | 7,5 | 26 | 15 | - | 20 | 25 | 32 | L - 15 | |
| | ¾"BSP | | | | | | | | | | | | | | |
| BS | - | - | 30 | 25 | - | 8,5 | 7,5 | - | - | 39 | 16 | 19 | - | L - 18 | |
| | - | - | 36 | 26 | - | 9,5 | 7,5 | - | - | 45 | 20 | 24 | - | L - 18 | |
| CD | M20x1.5 | 25 | - | - | 13 | - | 2 | 22 | 12 | - | - | - | 27 | L - 18 | |
| | ½"BSP | | | | | | | | | | | | | | |
| | M27x2 | 32 | - | - | 13 | - | 2 | 26 | 15 | - | - | - | 32 | L - 22 | |
| | ¾"BSP | | | | | | | | | | | | | | |
| CE | M20x1.5 | 25 | - | - | 13 | 8,5 | 2 | 25 | 25 | - | - | - | 27 | L - 18 | |
| | ½"BSP | | | | | | | | | | | | | | |
| | M27x2 | 32 | - | - | 13 | 9,5 | 2 | 29 | 32 | - | - | - | 32 | L - 22 | |
| | ¾"BSP | | | | | | | | | | | | | | |
| CS | - | - | 24 | - | - | 8,5 | 7,5 | - | - | 39 | - | - | - | L - 18 | |
| | - | - | 30 | - | - | 9,5 | 7,5 | - | - | 45 | - | - | - | L - 18 | |

L2 measures the distance of the stem and thread in the protection sheath
L measures the distance of the stem and thread in the thermowell

## Operation limits

| | | BD | BE | BS | CD | CE | CS |
|---|---|---|---|---|---|---|---|
| Maximum pressure bar | Brass | 25 | 150 | 160 | 25 | 150 | 160 |
| | Steel | 40 | 150 | 160 | 25 | 150 | 150 |
| Maximum temperature °C | Brass | 160 | 300 | 300 | 160 | 300 | 300 |
| | Steel | 400 | 300 | 400 | 400 | 300 | 400 |

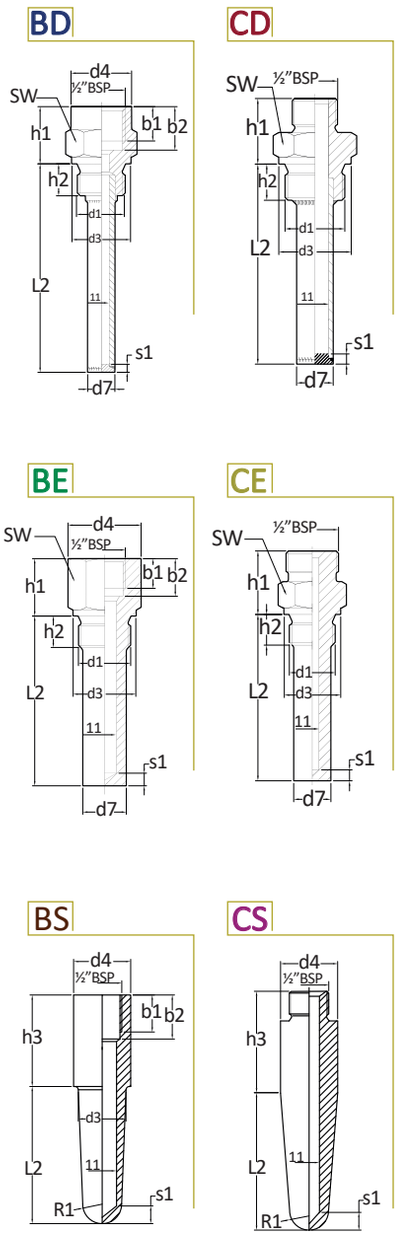


## How to order

**1.Model**

BD BE BS
CD CE CS

**2.Stem length in mm (L)**

63 100 160 200

**3.Stem diameter in mm**

Ø12 Ø13 Ø14
Ø17 Ø22

**4.Threaded connection**

½" BSP male ½" BSP Female

**5. Stem Material**

Brass
Chromed carbon steel
Galvanized carbon steel
Stainless steel AISI 304
Stainless steel AISI 316

| C0301 - | 1 | 2 | 3 | 4 | 5 |
|---|---|---|---|---|---|
| | | | | | |

www.termometros.com
Order it online!
+34 94 676 63 64
info@termometros.com



Gesa Termómetros S.L. · C/ Barrikako Bidea Pol. Ind. Igeltzera Pabellón D3 · 48610 Urduliz (Bizkaia) ESPAÑA

# V-shaped thermometer: Thermowell

Thermometer replacements for temperatures from -60°C to 600°C.
These instruments are very tough, easy to install and reliable



## STANDARD PARAMETERS

Design: DIN 16179

Structure: **For thermometers Straight/Angle 135°** and **Angle 90°**

Connection system : **Male** or **female thread** or **Bolt**

Threads: **Standard BSP**, **metrics** or **NPT**

Stem length (**L**), including thread: **25-500mm**

Stem diameter (Ø): **Ø8, Ø10 or Ø12mm**

## MATERIALS

**Brass / Chromed or Galvanized carbon steel / Stainless steel AISI 304, 316** or **316L**

**Angle 90°**

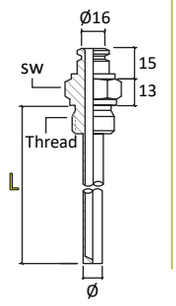


**Straight Angle 135°**

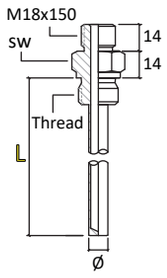


## How to order

**1.Model**

Angle 90° | Straight Angle 135°

**2.Stem lenght in mm (L)**

| | | | | | | |
|---|---|---|---|---|---|---|
| 30 | 45 | 80 | 130 | 250 | 400 |
| 35 | 50 | 100 | 160 | 300 | 450 |
| 40 | 63 | 120 | 200 | 350 | 500 |

**3.Stem diameter in mm**

Ø8 | Ø10 | Ø12

**4.Threaded connection**

| | | |
|---|---|---|
| ½" BSP male | ¾" NPT male | M22X150 male |
| ½" NPT male | M16X150 male | M27X200 male |
| ⅜" BSP male | M18X150 male | Bolt Ø16mm |
| ¾" BSP male | M20X150 male | Bolt Ø18mm |

**5.Stem material**

Brass
Chromed carbon steel
Galvanized carbon steel
Stainless steel AISI 304
Stainless steel AISI 316

**C0302 -** | 1 | 2 | 3 | 4 | 5 |

www.termometros.com



# V-shaped thermometer: Replacement cases

Thermometer replacements for temperatures from -60°C to 600°C.
These instruments are very tough, easy to install and reliable

## STANDARD PARAMETERS

Case dimension: **110, 150** or **200mm**

Case color: **Gold** or **Silver**

Mounting: **Straight, Angle 90** or **Angle 135**

## MATERIALS

**Aluminium** or **Polyamide**

**A Straight**

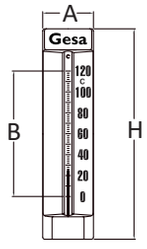


**B Angle 90°**

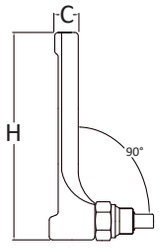


| DIMENSIONS(mm) | | | | | WEIGHT (g) | DIN |
|---|---|---|---|---|---|---|
| **Mounting** | **H** | **A** | **B** | **C** | | |
| Straight | 110 | 36 | 60 | 17 | 230 | DIN 16181 |
| | 150 | 36 | 90 | 17.5 | 285 | DIN 16185 |
| | 200 | 36 | 130 | 17.5 | 320 | DIN 16189 |
| Angle 90° | 110 | 36 | 60 | 17 | 230 | DIN 16182 |
| | 150 | 36 | 90 | 17 | 275 | DIN 16186 |
| | 200 | 36 | 130 | 17 | 310 | DIN 16190 |
| Angle 135° | 110 | 36 | 60 | 17 | 230 | - |
| | 150 | 36 | 90 | 17.5 | 275 | - |
| | 200 | 36 | 130 | 17.5 | 310 | DIN 16191 |

**C Angle 135°**

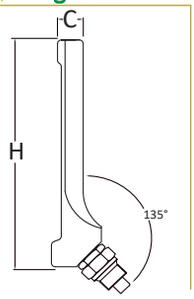


## How to order

**1.Case dimension (H)**

110
150
200

**2.Case material**

Aluminium
Polyamide

**3.Case color**

Gold
Silver

**4.Mounting**

A B C

**5.Temperature range (°C)**

| | | |
|---|---|---|
| -10+50 | 0+120 | 0+400 |
| -30+50 | 0+160 | 0+500 |
| 0+60 | 0+200 | 0+600 |
| 0+100 | 0+300 | |

**6.Temperature scale**

Single ɑC
Double ɑC / ɑF

**7.Logo**

GESA
Without Logo

**C0202 -** | 1 | 2 | 3 | 4 | 5 | 6 | 7 |

www.termometros.com

Order it online!

+34 94 676 63 64

info@termometros.com



Gesa Termómetros S.L. · C/ Barrikako Bidea Pol. Ind. Igeltzera Pabellón D3 · 48610 Urduliz (Bizkaia) ESPAÑA

# Industrial glass thermometers with opal scale

Liquid expansion thermometers for temperatures from -40°C to 200°C.
These instruments are very tough, easy to install and reliable.
They resist extreme hard conditions: vibrations, humidity, indoor and outdoors.

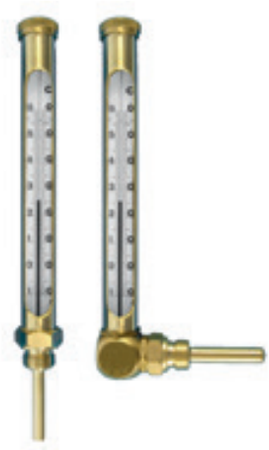

## STANDARD PARAMETERS

Design: DIN 16167, DIN 16174, DIN 16168, DIN 16175

Structure: The opal is secured by a metallic case. The temperature range is printed on the opal. The metallic stem is fixed into the system by male or female thread or through a bolt.

Case dimension (HxØF): **145xØ20**, **170xØ20, 200xØ22** or **260xØ22mm**

Mounting: See attached diagrams **A** or **B**

Connection system: **Male** or **female thread** or **Bolt**

Threads: **Standard BSP**, **metrics** or **NPT**

Stem length (**L**), including thread: **40-300mm**

Stem diameter (ØV) : **10** or **12mm**

Range: **-40...0...200°C**

Scale: **°C** or **double scale °C /°F**

## MATERIALS

Case: **Chromed steel, Stainless steel AISI 316** or **Brass**

Scale: Opal

Insert: Glass

Thread and Stem: **Chromed steel, Stainless steel AISI 316** or **Brass**

Termometric liquid: **Blue** or **red alcohol**

**A** Straight

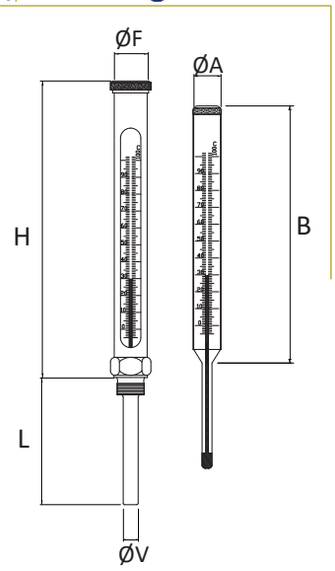


**B** Angle 90°

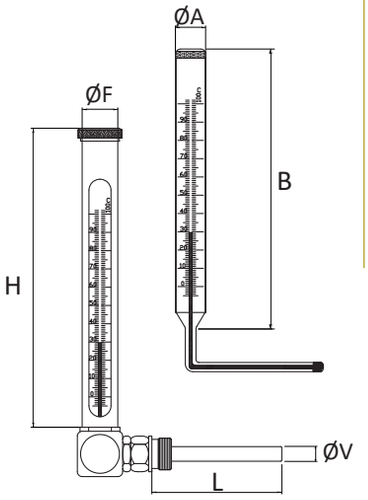


**Application:**

- **Heater**
- **Boilers**
- **Naval sector**

| DIMENSIONS(mm) | | | | | | WEIGHT (g) | DIN |
|---|---|---|---|---|---|---|---|
| **Mounting** | **H** | **B** | **ØF** | **ØA** | **ØV** | | |
| Straight | 145 | 135 | 20 | 16 | 10 | 81 | - |
| | 170 | 160 | 20 | 16 | 10 | 81 | DIN 16167 |
| | 200 | 190 | 22 | 18 | 10 | 130 | - |
| | 260 | 220 | 22 | 18 | 10 | 152 | DIN 16174 |
| Angle 90° | 145 | 135 | 20 | 16 | 10 | 81 | - |
| | 170 | 160 | 20 | 16 | 10 | 81 | DIN 16168 |
| | 200 | 190 | 22 | 18 | 10 | 130 | - |
| | 260 | 220 | 22 | 18 | 10 | 152 | DIN 16175 |

Temperature range according to DIN 16195

| Tmp. in °C | H | Subdivision °C/line | Maximum error | Liquid |
|---|---|---|---|---|
| -40+40 | 145 | 1 | 2 | Blue alcohol |
| | 170 | | | |
| | 200 | | | |
| | 260 | | | |
| -10+50<br>-10+60<br>0+60<br>0+100<br>0+120 | 145 | 2 | 1 | |
| | 170 | 1 | | |
| | 200 | | | |
| | 260 | | | |
| 0+150<br>0+200 | 145 | 2 | 2 | |
| | 170 | | | |
| | 200 | | | |
| | 260 | | | |

## How to order

**1.Case dimension**
145xØ20mm
170xØ20mm
200xØ22mm
260xØ22mm

**2.Case material**
Brass
Chromed steel
Stainless steel AISI 316

**3.Mounting**
A B

**4.Temperature range (°C)**
-40+40 0+60 0+120 0+200
-10+60 0+100 0+150

**5.Temperature scale**
Single ɑC
Double ɑC / ɑF

**6.Thermometric liquid**
Blue alcohol
Red alcohol
Mercury

**7.Stem length in mm (L), including thread**
40 55 100 250
45 63 160 300
50 80 200

**8.Stem diameter in mm (ØV)**
Ø10
Ø12

**9.Stem material**
Brass
Chromed carbon steel Stainless steel AISI 304
Galvanized carbon steel Stainless steel AISI 316

**10.Threaded connection**
½" BSP male ¾" BSP male M18x150male Without threaded connection
½" BSPT male ¾" NPT male M20X150 male More threads on demand
½" NPT male Bolt Ø16 mm M22X150 male
⅜" BSP male Bolt Ø18 mm M27X200 male

**11.Calibration certificate traceable to ENAC**
3 points 6 points
4 points 7 points
5 points Without certificate

| | 1 | 2 | 3 | 4 | 5 | 6 | 7 | 8 | 9 | 10 | 11 |
|---|---|---|---|---|---|---|---|---|---|---|---|
| **F0101 -** | | | | | | | | | | | |

www.termometros.com
Order it online!
+34 94 676 63 64
info@termometros.com



Gesa Termómetros S.L. · C/ Barrikako Bidea Pol. Ind. Igeltzera Pabellón D3 · 48610 Urduliz (Bizkaia) ESPAÑA

# W 01 01

## Solid Stem Glass Thermometers W0101th protection sheath



Solid stem glass thermometers protected in a metallic sheath 10mm diameter with a ring at the upper side for hanging.

Useful for high and under zero temperatures.

The scale marked on the thermometer is acid and alkali proof.

### STANDARD PARAMETERS

Structure: The stem glass is fixed and secured with a plug located at each end of the sheath. In the upper side, the sheath is complemented with a ring useful for hang. See attached diagram **A**

Upper closing: **Rounded, Ball** or **Ring**

Stem dimension (Hv x Øv): **200xØ6mm, 300xØ6mm** or **400xØ6mm**

Sheath dimension: **218xØ10mm**, **318xØ10mm** or **418xØ10mm**

Range: **-50...0...500°C**

Scale: **°C stamped on the glass**

Glass rod: White strip (Low temperatures) / Yellow strip (High temperatures)

**A Straight**

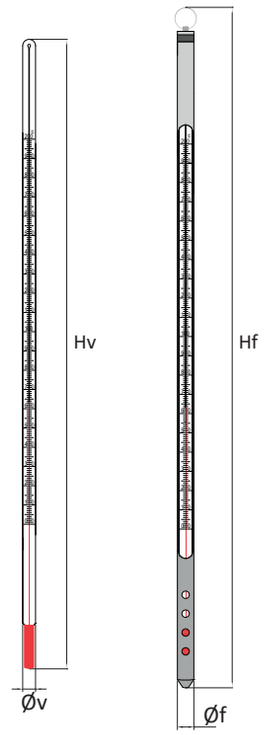


**Application:**
- Heating
- Boilers
- Naval sector
- Fridges
- Laboratories
- General

### MATERIALS

Sheath: Brass

Stem: Round glass

Thermometric liquid: Blue or red alcohol for temp<200°C / Mercury for temp.>200°C

Temperature range according to DIN 16195 (H=300mm)

| Tmp. in °C | Subdivision °C/line | Maximum error | Líquid |
|---|---|---|---|
| -50+50 | 1 | 2 | Alcohol |
| -40+40<br>-10+100<br>0+60<br>0+100 | 1 | 1 | |
| 0+200 | 2 | 2 | |
| 0+300 | 2 | 2 | Mercury |
| 0+500 | 10 | 5 | |

Upper closing

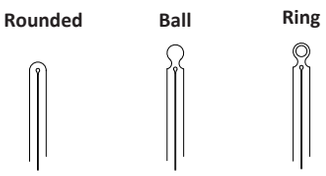


## How to order

**1.Model**

With brass sheath
Without sheath

**2.Temperature range**

-50+50 -10+100 0+100 0+300
-40+40 0+60 0+200 0+500

**3.Thermometric liquid**

Blue alcohol
Red alcohol
Mercury

**4.Upper closing**

Rounded Ball Ring

**5.Stem Length**

200mm
300mm
400mm

**6.Calibration certificate traceable to ENAC**

3 points 5 points 7 points
4 points 6 points Without certificate

| W0101 - | 1 | 2 | 3 | 4 | 5 | 6 |
|---|---|---|---|---|---|---|
| | | | | | | |

www.termometros.com

Order it online!


+34 94 676 63 64
info@termometros.com

Gesa Termómetros S.L. · C/ Barrikako Bidea Pol. Ind. Igeltzera Pabellón D3 · 48610 Urduliz (Bizkaia) ESPAÑA

# TEMPERATURA
# TEMPÉRATURE
# TEMPERATURE

## Termómetros de dial
## Thermomètres à Cadran
## Dial thermometers

# Bimetallic dial thermometer in stainless steel

**D 01**



Dial thermometers with bimetallic strip, inner components in copper alloy. Manufactured according to EN 13190. Radial or back connection.

Reliable tools that withstand extreme working conditions: engine vibration, humidity and aggressive media such as seawater.

## A Bottom

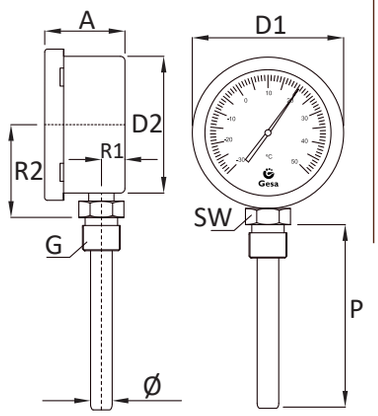


## B Back

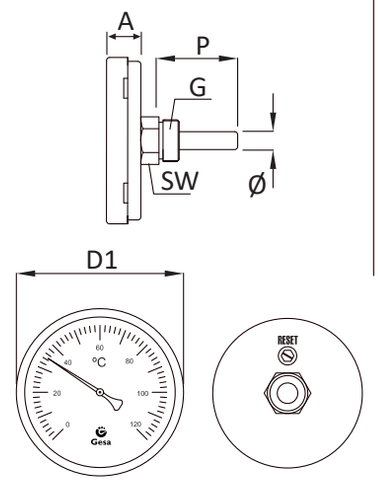


## STANDARD PARAMETERS

- Design: EN 13190
- Mounting: See attached diagrams **A** or **B**
- Closing: **A**: Bayonet; **B**: Sealed ring
- IP protection: IP54 (EN 60529)
- Accuracy: **Ø80**: Class 1.6 / **Ø100-Ø150**: Class 1.0
- Usage limits:
  - Working temperature: -40+65°C
  - Fluid overtemperature: maximum 10% end of scale
  - Max. pressure on stem: 16 bar
- Temperature range: **-30+50; 0+60; 0+120; 0+200; 0+400** °C
- Sensor element: Bimetallic strip
- Stem length: **50; 65; 100; 150; 200; 250; 300** mm
- Process connection: **Plain Bulb, Sliding on the stem, protection sheath** or **crazy nut**
- Threaded connection (G): **½"NPT, ½"BSP** or **¾"BSP** / **Male** or **Female**

## Application:

- **Compressed air**
- **Compressors**
- **HVAC**
- **Hydraulics**
- **Pneumatics**

## MATERIALS

- Case and ring: AISI 304 Stainless steel
- Moving parts and bimetallic strip: Copper alloy
- Threaded connection: **Brass** or **AISI 316 Stainless steel**
- Display: Glass
- Dial: White lacquered aluminum
- Pointer: Black lacquered aluminum
- Bulb/Stem: AISI 316 stainless steel

## DIMENSIONS (mm) / WEIGHT (g)

| DN | Mounting | R1 | A | D1 | Ø | R2 | SW | D2 | WEIGHT (g) |
|---|---|---|---|---|---|---|---|---|---|
| Ø80 | A | 12 | 47 | 84 | 11 | 54 | 22 | 75 | 212 |
| Ø80 | B | - | 17 | 84 | 11 | - | 22 | - | 99 |
| Ø100 | A | 13 | 50 | 110 | 11 | 65 | 22 | 100 | 285 |
| Ø100 | B | - | 20 | 110 | 11 | - | 22 | - | 176 |
| Ø150 | A | 15 | 50 | 160 | 11 | 90 | 22 | 150 | 545 |
| Ø150 | B | - | 20 | 160 | 11 | - | 22 | - | 485 |

## Temperature scale according to DIN 16206

| Scale printed on the dial (°C) | Working range (°C) | Subdivision °C/line | Maximum error |
|---|---|---|---|
| -30+50<br>0+60 | -20+40<br>+10+50 | 1 | 1.5 |
| 0+120<br>0+200 | +20+100<br>+20+180 | 2 | 3 |
| 0+400 | +50+350 | 5 | 8 |

## How to order

**1.Case diameter**: Ø80 Ø100 Ø150

**2.Temperature range (°C)**: -30+50 0+60 0+120 0+200 0+400

**3.Mounting**: A B

**4.Stem length (mm)**: 50 65 100 150 250 300

**5.Process connection**: Protection sheath, Sliding on stem / Plain bulb, Crazy nut

**6.Threaded connection**: ½"BSP, ¾"BSP, ½"NPT

**7.Connection type**: Male, Female

**8.Connection material**: Brass, AISI 316 Stainless steel

**9.Calibration certificate traceable to ENAC**: 3 points, 4 points, 5 points, 6 points, 7 points, Without certificate

| | 1 | 2 | 3 | 4 | 5 | 6 | 7 | 8 | 9 |
|---|---|---|---|---|---|---|---|---|---|
| D01 - | | | | | | | | | |


www.termometros.com

Order it online!

+34 94 676 63 64

info@termometros.com





Gesa Termómetros S.L. · C/ Barrikako Bidea Pol. Ind. Igeltzera Pabellón D3 · 48610 Urduliz (Bizkaia) SPAIN

# D 02

## Bimetallic dial thermometer in stainless steel with orientable stem

Dial thermometers with bimetallic strip, inner components in copper alloy. Manufactured according to EN 13190.



Orientable stem makes it a versatile instrument, useful for a wide variety of applications.

Reliable tools that withstand extreme working conditions: engine vibration, humidity and aggressive media such as seawater.

### STANDARD PARAMETERS

- Design: EN 13190
- Mounting: See attached diagram **E**
- Closing: Bayonet
- IP protection: IP54 (EN 60529)
- Accuracy: Class 1.6
- Usage limits:
  - Working temperature: -40+65°C
  - Fluid overtemperature: maximum 10% end of scale
  - Max. pressure on stem: 16 bar
- Temperature range: **-40+60; 0+120; 0+200; 0+300; 0+400** °C
- Sensor element: Bimetallic strip
- Stem length: **150; 200; 250** mm
- Process connection: **Sliding on the stem** or **Plain bulb**
- Threaded connection (G): **½"BSP, ¾"BSP** or **½"NPT** / **Male** or **Female**

### MATERIALS

- Case and ring: AISI 304 Stainless steel
- Moving parts and bimetallic strip: Copper alloy
- Threaded connection: AISI 316 Stainless steel
- Display: Glass
- Dial: White lacquered aluminum
- Pointer: Black lacquered aluminum
- Stem: AISI 316 stainless steel

**Application:**

- Compressed air
- Compressors
- HVAC
- Hydraulics
- Pneumatics

**E Orientable**

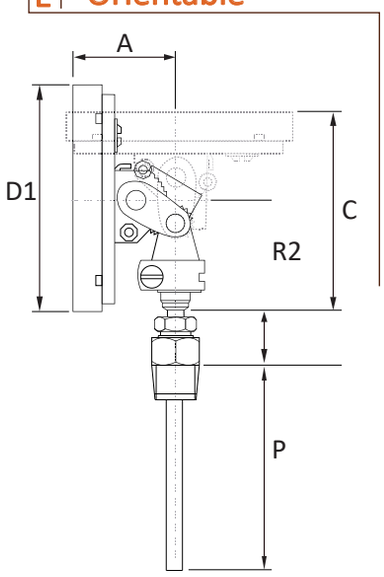


| DIMENSIONS (mm) | | | | | | | | | WEIGHT (g) |
|---|---|---|---|---|---|---|---|---|---|
| DN | Mounting | R1 | A | D1 | Ø | R2 | SW | D2 | |
| Ø100 | E | 12 | 47 | 84 | 8 | 54 | 22 | 75 | 425 |
| Ø150 | E | - | 17 | 84 | 8 | - | 22 | - | 642 |

| Temperature scale according to DIN 16206 | | | |
|---|---|---|---|
| Scale printed on the dial (°C) | Working range (°C) | Subdivision °C/line | Maximum error |
| -40+60 | -30+40 | 1 | 1.5 |
| 0+120<br>0+200 | +20+100<br>+20+180 | 2 | 3 |
| 0+300<br>0+400 | +50+250<br>+50+350 | 5 | 8 |

## How to order

**1.Case diameter**: Ø100 | Ø150

**2.Temperature range (°C)**: -40+60 | 0+120 | 0+200 | 0+300 | 0+400

**3.Stem length (mm)**: 150 | 200 | 250

**4.Process connection**: Sliding on stem | Plain bulb

**5.Threaded connection**: ½"BSP | ¾"BSP | ½"NPT

**6.Connection type**: Male | Female

**7.Calibration certificate traceable to ENAC**: 3 points | 4 points | 5 points | 6 points | 7 points | Without certificate

| D02 - | 1 | 2 | 3 | 4 | 5 | 6 | 7 |
|---|---|---|---|---|---|---|---|
| | | | | | | | |

www.termometros.com

Order it online!

+34 94 676 63 64

info@termometros.com



Gesa Termómetros S.L. · C/ Barrikako Bidea Pol. Ind. Igeltzera Pabellón D3 · 48610 Urduliz (Bizkaia) SPAIN

# Bimetallic dial thermometer in zincked steel

D 03

Dial thermometers with bimetal strip with internal copper alloy elements. Manufactured according to EN 13190 standard.

They are economic instruments especially designed for heating and cooling applications.



## STANDARD PARAMETERS

- Design: EN 13190
- Mounting: See attached diagrams **A** or **B**
- Closing: **A**: Bayonet; **B**: Sealed ring
- IP protection: IP56 (EN 60529)
- Accuracy: Class 2.5
- Temperature limits:
  - Room temperature: -40+65°C
  - Fluid overtemperature: maximum 10% end of scale
  - Max. pressure on stem: 16 bar
- Temperature range: **-20+60; 0+120** °C
- Sensor element: Bimetallic strip
- Stem length (P): **50; 65; 100** mm
- Process connection: Trough protection sheath
- Threaded connection (G): ½"BSP Male

**Application:**

- **Heating systems**
- **Refrigeration**

## MATERIALS

- Case and ring: Zincked steel
- Moving parts and bimetallic strip: Copper alloy
- Threaded connection: **Brass** or **AISI 316 Stainless steel**
- Display: Glass
- Dial: White lacquered aluminum
- Pointer: Black lacquered aluminum
- Stem: Brass

## A Bottom

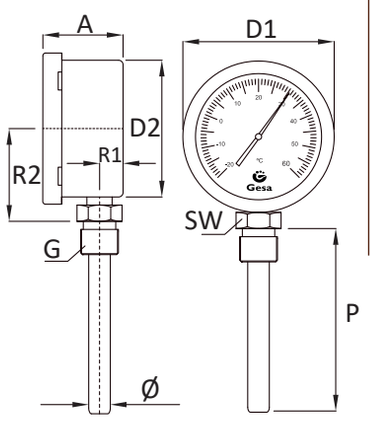


## B Back

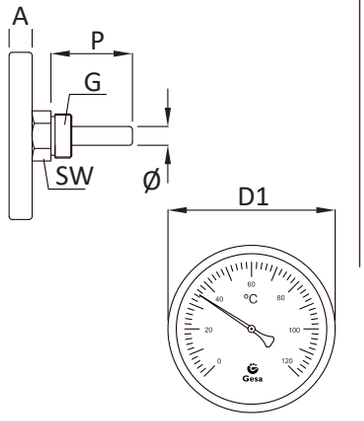


| DIMENSIONS (mm) | | | | | | | | | WEIGHT (g) | |
|---|---|---|---|---|---|---|---|---|---|---|
| DN | Mounting | R1 | A | D1 | Ø | R2 | SW | D2 | P=50mm | P=100mm |
| Ø63 | A | 12 | 47 | 68 | 11 | 44 | 22 | 60 | 174 | 184 |
| Ø63 | B | - | 12 | 63 | 11 | - | 22 | - | 134 | 147 |
| Ø80 | A | 13 | 50 | 84 | 11 | 54 | 22 | 75 | 204 | 216 |
| Ø80 | B | - | 13 | 80 | 11 | - | 22 | - | - | 176 |

**Temperature scale according to DIN 16206**

| Scale printed on the dial (°C) | Working range (°C) | Subdivision °C/line | Maximum error |
|---|---|---|---|
| -20+60 | -10+50 | 1 | 2 |
| 0+120 | +20+100 | 2 | 3 |

## How to order

**1.Case diameter**: Ø63 Ø80

**2.Temperature range (°C)**: -20+60 0+120

**3.Mounting**: A B

**4.Stem length (mm)**: 50 65 100

**5.Connection material**: Brass / AISI 316 Stainless steel

**6.Calibration certificate traceable to ENAC**

3 points 6 points
4 points 7 points
5 points Without certificate

| D03 - | 1 | 2 | 3 | 4 | 5 | 6 |
|---|---|---|---|---|---|---|
| | | | | | | |

www.termometros.com

Order it online!


+34 94 676 63 64
info@termometros.com

Gesa Termómetros S.L. · C/ Barrikako Bidea Pol. Ind. Igeltzera Pabellón D3 · 48610 Urduliz (Bizkaia) SPAIN

# D 22

## Pyrometer with antivibration system for High Temperatures

Gesa

Gas expansion thermometers manufactured according to EN 13190 standard.
Reliable tools that withstand extreme working conditions: engine vibration, humidity and aggressive media such as seawater.



Especially designed to measure the temperature of the exhaust gases of the engines. The pyrometer box is filled with silicon oil serving as a vibration dampener.

| STANDARD PARAMETERS |
|---|
| Design: EN 13190 |
| Mounting: See attached diagrams **A** or **B** |
| Closing: Bayonet. Sealed by rubber gasket |
| IP protection: IP65 (EN 60529) |
| Accuracy: Class 1.6 |
| Temperature limits: |
| Room temperature: -40+65°C |
| Fluid overtemperature: maximum 15% end of scale |
| Max. pressure on stem: 50 bar |
| Temperature range: +50+650 °C/°F |
| Sensor element: Bourdon tube (Inert gas expansion) |
| Stem length (P): **150; 200; 300; 400** mm |
| Process connection: Sliding on the stem |
| Threaded connection: **½"BSP, ½"NPT, ⅜"BSP, ¾"BSP, M20x150** or **M22x150** |
| Antivibration liquid: Silicon oil |
| Vibration damping system: **Spring** or **Silent block (mesh)** |

**Application:**
- **Engines**
- **HVAC**

| MATERIALS |
|---|
| Case and ring: AISI 304 Stainless steel |
| Moving parts and bourdon tube: Stainless steel |
| Threaded connection: AISI 316 Stainless steel |
| Display: Glass |
| Dial: White lacquered aluminum |
| Pointer: Black lacquered aluminum |
| Stem: AISI 316 Stainless steel |

**A Spring**

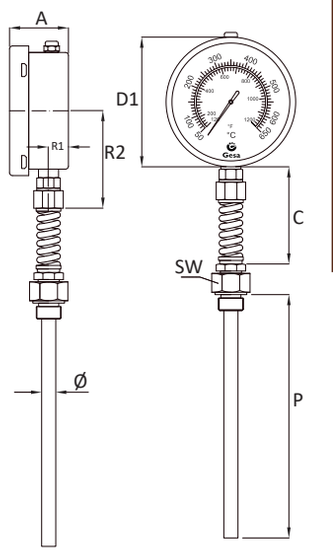


**B Silent block (mesh)**

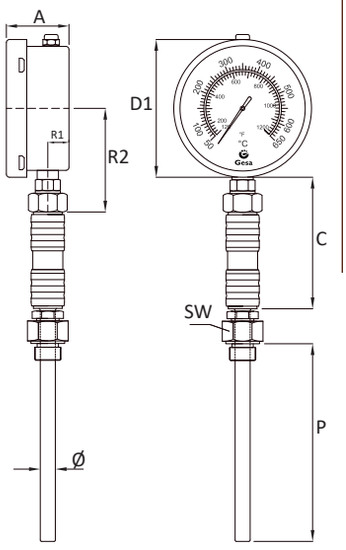


| DIMENSIONS (mm) | | | | | | | | | WEIGHT (g) |
|---|---|---|---|---|---|---|---|---|---|
| **DN** | **Tipo** | **R1** | **A** | **D1** | **Ø** | **R2** | **SW** | **C** | |
| Ø100 | **A** | 12 | 50 | 112 | 12 | 83 | 27 | 103 | 1020 |
| Ø100 | **B** | 12 | 50 | 112 | 12 | 84 | 27 | 130 | 1020 |

Temperature scale according to DIN 16206

| Scale printed on the dial (°C) | Working range (°C) | Subdivision °C/line | Maximum error |
|---|---|---|---|
| +50+650 | +100+600 | 10 | 10 |

## How to order

**1.Vibration damping system**
**A** **B**

**2.Stem length (mm)**
150 300
200 400

**3.Threaded connection**
½"BSP ⅜"BSP M20x150 More on demand
½"NPT ¾"BSP M22x150

**4.Connection type**
Male
Female

**5.Calibration certificate traceable to ENAC**
3 points 6 points
4 points 7 points
5 points Without certificate

| | 1 | 2 | 3 | 4 | 5 |
|---|---|---|---|---|---|
| **D22 -** | | | | | |

www.termometros.com

Order it online!

+34 94 676 63 64

info@termometros.com



Gesa Termómetros S.L. · C/ Barrikako Bidea Pol. Ind. Igeltzera Pabellón D3 · 48610 Urduliz (Bizkaia) SPAIN

# Rigid high temperature pyrometer

D 23

Gas expansion thermometers manufactured according to EN 13190 standard. Reliable tools that withstand extreme working conditions: engine vibration, humidity and aggressive media such as seawater.

Especially designed to measure the temperature of the exhaust gases of the engines. The pyrometer box is filled with silicon oil serving as a vibration dampener.



## STANDARD PARAMETERS

- Design: EN 13190
- Mounting: See attached diagrams **A** or **B**
- Closing: Ring threaded to case. Sealed by rubber gasket
- IP protection: IP65 (EN 60529)
- Accuracy: Class 1.6
- Temperature limits:
  - Room temperature: -40+65°C
  - Fluid overtemperature: maximum 15% end of scale
  - Max. pressure on stem: 50 bar
- Temperature range: +50+650 °C/°F
- Sensor element: Bourdon tube (Inert gas expansion)
- Stem length (P): **150; 200; 300; 400** mm
- Process connection: Sliding on the stem
- Threaded connection: **½"BSP, ½"NPT, ⅜"BSP, ¾"BSP, M20x150** or **M22x150**
- Antivibration liquid: Silicon oil
- Vibration damping system: Rigid

**Application:**

- **Engines**
- **HVAC**

## MATERIALS

- Case and ring: Black anodized aluminum
- Moving parts and bourdon tube: Copper alloy
- Threaded connection: AISI 304 Stainless steel
- Display: Glass
- Dial: White lacquered aluminum
- Pointer: Black lacquered aluminum
- Stem: AISI 304 Stainless steel

**A** Bottom

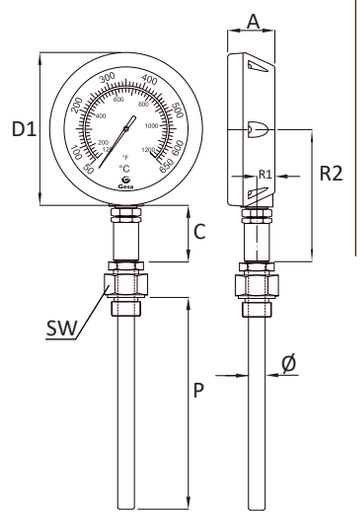


**B** Back

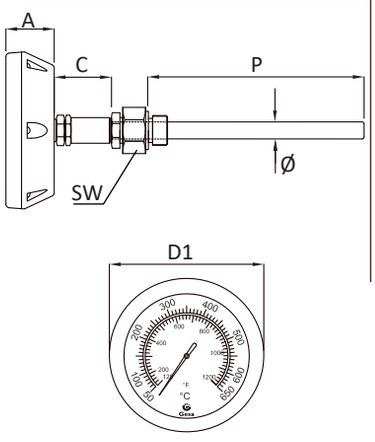


| DIMENSIONS (mm) | | | | | | | | | WEIGHT (g) |
|---|---|---|---|---|---|---|---|---|---|
| **DN** | **Mounting** | **R1** | **A** | **D1** | **Ø** | **R2** | **SW** | **C** | |
| Ø100 | A | 12 | 32 | 118 | 12 | 100 | 27 | 42 | 877 |
| Ø100 | B | - | 32 | 118 | 12 | - | 27 | 42 | 877 |

**Temperature scale according to DIN 16206**

| Scale printed on the dial (°C) | Working range (°C) | Subdivision °C/line | Maximum error |
|---|---|---|---|
| +50+650 | +100+600 | 10 | 10 |

## How to order

**1.Mounting**

A B

**2.Stem length (mm)**

150 300
200 400

**3.Threaded connection**

½"BSP ⅜"BSP M20x150 More on demand
½"NPT ¾"BSP M22x150

**4.Connection type**

Male
Female

**5.Calibration certificate traceable to ENAC**

3 points 6 points
4 points 7 points
5 points Without certificate

| | 1 | 2 | 3 | 4 | 5 |
|---|---|---|---|---|---|
| **D23 -** | | | | | |

www.termometros.com

Order it online!



Gesa Termómetros S.L. · C/ Barrikako Bidea Pol. Ind. Igeltzera Pabellón D3 · 48610 Urduliz (Bizkaia) SPAIN

+34 94 676 63 64
info@termometros.com

# D 31

## Dial thermometer with capillary in stainless steel

Gas expansion thermometers manufactured according to EN 13190 standard
Reliable tools that withstand extreme working conditions: engine vibration, humidity and aggressive media such as seawater.
Bottom connection to panel through back flange.

Especially designed for remotely measuring temperatures in chemical, petroleum and food industries.



**Application:**

- Chemical Industry
- Oil industry
- Food
- HVAC
- Cooling

### STANDARD PARAMETERS

Design: EN 13190
Mounting: See attached diagram **C**
Closing: Bayonet. Sealed by rubber gasket
IP protection: IP65 (EN 60529)
Accuracy: Class 1.6
Temperature limits:
- Room temperature: -40+60°C
- Fluid overtemperature: maximum 10% end of scale
- Max. pressure on stem: 25 bar. For upper pressures see C0301

Temperature range: **0+120; 0+200; 0+400; +50+650** °C/°F
Sensor element: Bourdon tube (Inert gas expansion). Room temperature compensator by bimetallic strip
Capillary length (L): **3; 5; 8** m
Stem length (P): **150; 250** mm
Process connection: **Plain Bulb, Sliding on the stem** or **crazy nut**
Threaded connection: **½"BSP, ½"BSPT, ½"NPT, ⅜"BSP, ¾"BSP, M20x150** or **M22x150**
Antivibration liquid: **Glycerine** or **dry**
Overtemperature relief system: Upper plug

### MATERIALS

Case and ring: AISI 304 Stainless steel
Moving parts and bourdon tube: Copper alloy
Capillary: AISI 304 Stainless steel
Display: Glass
Dial: White lacquered aluminum
Pointer: Black lacquered aluminum
Capillary coating: AISI 316 Stainless steel
Bulb/Stem: AISI 316 Stainless steel
Threaded connection: AISI 316 Stainless steel

**C** Bottom with back flange

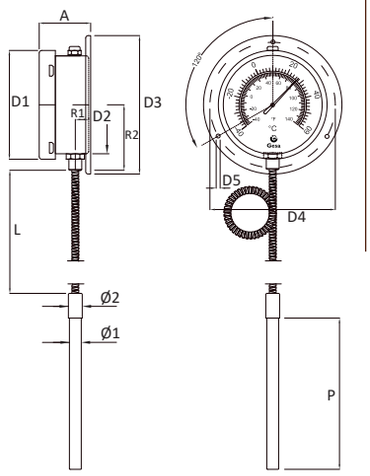


| DIMENSIONS (mm) | | | | | | | | | | | | WEIGHT (g) | | |
|---|---|---|---|---|---|---|---|---|---|---|---|---|---|---|
| DN | Mounting | A | Ø1 | Ø2 | R1 | R2 | D1 | D2 | D3 | D4 | D5 | L=3m | L=5m | L=8m |
| Ø100 | C | 52 | 10 | 12 | 14 | 67 | 110 | 100 | 140 | 124 | 4 | 782 | 835 | 1016 |
| | | | | | | | | | | | | | Glycerine +271g | |

| Temperature scale according to DIN 16206 | | | |
|---|---|---|---|
| Scale printed on the dial (°C) | Working range (°C) | Subdivision °C/line | Maximum error |
| 0+120<br>0+200 | +20+100<br>+20+180 | 2 | 3 |
| 0+400 | +50+350 | 5 | 8 |
| +50+650 | +100+600 | 10 | 10 |

## How to order

**1.Temperature range (°C)**
0+120 0+200 0+400 +50+650

**2.Stem length (mm)**
150 250

**3.Capillary length (L) in mm**
3 5 8

**4.Process connection**
Crazy nut
Sliding on stem
Plain bulb

**5.Threaded connection**
½" BSP ⅜" BSP
½" BSPT M20X150
½" NPT M22X150
⅜" BSP Other threads

**6.Connection type**
Male
Female

**7.Antivibration liquid**
Glycerine
Dry

**8.Calibration certificate traceable to ENAC**
3 points 6 points
4 points 7 points
5 points Without certificate

| | 1 | 2 | 3 | 4 | 5 | 6 | 7 | 8 |
|---|---|---|---|---|---|---|---|---|
| D31 - | | | | | | | | |

www.termometros.com
Order it online!



Gesa Termómetros S.L. · C/ Barrikako Bidea Pol. Ind. Igeltzera Pabellón D3 · 48610 Urduliz (Bizkaia) SPAIN
+34 94 676 63 64
info@termometros.com

# Dial thermometer with capillary in PVC coated stainless steel

D 32



Gas expansion thermometers manufactured according to EN 13190 standard
Reliable tools that withstand extreme working conditions: engine vibration, humidity and aggressive media such as seawater.

Especially designed to measure temperatures remotely.

## STANDARD PARAMETERS

- Design: EN 13190.
- Mounting: See attached diagram **C**
- Closing: Bayonet. Sealed by rubber gasket
- IP protection: IP56 (EN 60529)
- Accuracy: Class 1.6
- Temperature limits:
  - Room temperature: -40+60°C
  - Fluid overtemperature: maximum 10% end of scale
  - Max. pressure on stem: 25 bar. For upper pressures see C0301
- Temperature range: -60+40 °C
- Sensor element: Bourdon tube (Inert gas expansion). Room temperature compensator by bimetallic strip
- Capillary length (L): **3; 5; 8** m
- Stem length (P): 100 mm
- Process connection: **Plain Bulb, Sliding on the stem** or **crazy nut**
- Threaded connection: **½"BSP, ½"BSPT, ½"NPT, ⅜"BSP, ¾"BSP, M20x150** or **M22x150**
- Overtemperature relief system: Upper plug

**Application:**
- **Chemical Industry**
- **Oil industry**
- **Food**
- **HVAC**
- **Cooling**

## MATERIALS

- Case and ring: AISI 304 Stainless steel
- Moving parts and bourdon tube: Copper alloy
- Capillary: AISI 304 Stainless steel
- Display: Glass
- Dial: White lacquered aluminum
- Pointer: Black lacquered aluminum
- Capillary coating: PVC
- Bulb/Stem: AISI 316 Stainless steel
- Threaded connection: AISI 304 Stainless steel

**C** Bottom with back flange

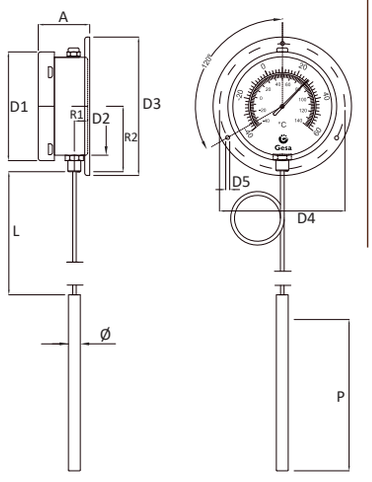


| DIMENSIONS (mm) | | | | | | | | | | | WEIGHT (g) | | | Temperature scale according to DIN 16206 | | | |
|---|---|---|---|---|---|---|---|---|---|---|---|---|---|---|---|---|---|
| DN | Mounting | A | Ø | R1 | R2 | D1 | D2 | D3 | D4 | D5 | L=3m | L=5m | L=8m | Scale printed on the dial (°C) | Working range (°C) | Subdivision °C/line | Maximum error |
| Ø100 | C | 41 | 8 | 14 | 67 | 110 | 100 | 140 | 124 | 4 | 448 | 483 | 542 | +50+650 | +100+600 | 10 | 10 |

## How to order

**1.Capillary length (L) in mm**
3 5 8

**2.Process connection**
Crazy nut
Sliding on stem
Plain bulb

**3.Threaded connection**
½" BSP ⅜" BSP
½" BSPT M20X150
½" NPT M22X150
⅜" BSP Other threads

**4.Connection type**
Male
Female

**5.Calibration certificate traceable to ENAC**
3 points 6 points
4 points 7 points
5 points Without certificate

| | 1 | 2 | 3 | 4 | 5 |
|---|---|---|---|---|---|
| D32 - | | | | | |

www.termometros.com

Order it online!


+34 94 676 63 64
info@termometros.com





Gesa Termómetros S.L. · C/ Barrikako Bidea Pol. Ind. Igeltzera Pabellón D3 · 48610 Urduliz (Bizkaia) SPAIN

# D 33

## Dial thermometer with plastic case and copper capillary



Gas expansion thermometers with Bourdon elastic element and an environmental temperature compensator through bimetallic strip.
These simple instruments are especially designed to measure temperatures remotely in cooling and refrigeration chambers.

### STANDARD PARAMETERS

- Design: EN 13190
- Mounting: See attached diagram **B**
- Closing: Bayonet. Sealed by rubber gasket
- IP protection: IP43
- Accuracy: Class 2.5
- Temperature range: **-40+40** or **0+120**°C
- Sensor element: Bourdon tube (Inert gas expansion). Room temperature compensator by bimetallic strip
- Capillary length (L): 1.5m
- Stem length (P): 100 mm
- Process connection: Plain bulb

### MATERIALS

- Case and ring: Polyethylene
- Moving parts and bourdon tube: Copper alloy
- Bulb/stem: Copper alloy
- Display: Polyethylene
- Dial: Polyethylene
- Pointer: Polyethylene
- Capillary coating: PVC
- Stem: Copper alloy

**Application:**
- Chemical Industry
- Food
- HVAC
- Cooling

## B Back

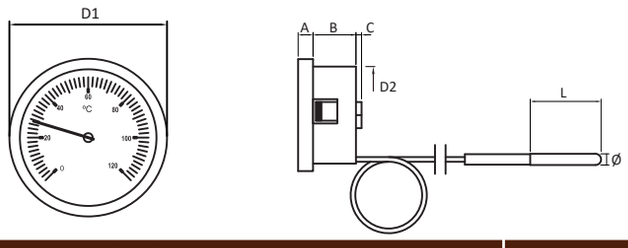


| DIMENSIONS (mm) | | | | | | | | | WEIGHT (g) | Temperature scale according to DIN 16206 | | | |
|---|---|---|---|---|---|---|---|---|---|---|---|---|---|
| DN | Mounting | A | Ø | B | C | D1 | D2 | L | | Scale printed on the dial (°C) | Working range (°C) | Subdivision °C/line | Maximum error |
| Ø50 | C | 8 | 6 | 23 | 3 | 58 | 52 | 30 | 57 | -40+40 | -30+30 | 1 | 2 |
| | | | | | | | | | | 0+120 | +20+100 | 2 | 3 |

## How to order

**1.Temperature range (°C)**

-40+40 0+120

**2.Calibration certificate traceable to ENAC**

3 points 6 points
4 points 7 points
5 points Without certificate

**D33 -** 1 2

www.termometros.com

Order it online!



Gesa Termómetros S.L. · C/ Barrikako Bidea Pol. Ind. Igeltzera Pabellón D3 · 48610 Urduliz (Bizkaia) SPAIN
+34 94 676 63 64
info@termometros.com

# D 61

## Bimetallic thermometer for pipes



Thermometer with spring attachment for pipes.

This thermometer can be placed non-invasively in installations making it an effective and versatile control tool.

| STANDARD PARAMETERS |
|---|
| Design: EN 13190 |
| Mounting: See attached diagram |
| Closing: Embedded |
| IP protection: IP56 |
| Accuracy: Class 2.0 |
| Temperature range: **0+120 or 0+200**°C |
| Sensor element: Bimetallic strip |
| Weight: 54g |

| MATERIALS |
|---|
| Case and ring: Zincked steel |
| Moving parts and bimetallic strip: Copper alloy |
| Display: Glass |
| Dial: White lacquered aluminum |
| Pointer: Black lacquered aluminum |

**Application:**
- **Heating systems**
- **Piping**

### DIMENSIONS (mm)

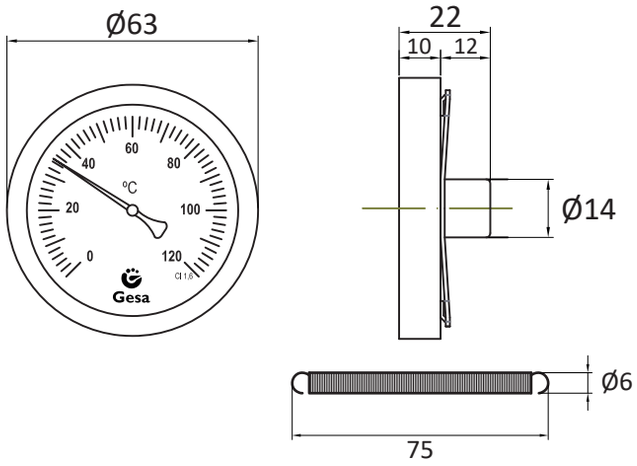


### Temperature scale according to DIN 16206

| Scale printed on the dial (°C) | Working range (°C) | Subdivision °C/line | Maximum error |
|---|---|---|---|
| 0+120 | 20+100 | 2 | 1.5 |
| 0+200 | 20+180 | 5 | 8 |

## How to order

**1.Temperature range (°C)**

0+120 0+200

**2.Calibration certificate traceable to ENAC**

3 points 5 points 7 points
4 points 6 points Without certificate

**D 61 -** [1] [2]

www.termometros.com

Order it online!



+34 94 676 63 64
info@termometros.com
Gesa Termómetros S.L. · C/ Barrikako Bidea Pol. Ind. Igeltzera Pabellón D3 · 48610 Urduliz (Bizkaia) SPAIN

# MEDIDORES DIGITALES
# COMPTEURS DIGITAUX
# DIGITAL INSTRUMENTS

Registradores de datos / Dataloggers
Enregistreurs de données
Dataloggers

Digital

# Dataloggers Tempmate®

## Multi-Use temperature Datalogger Tempmate® M1



Reference: Tempmate M1

Designed to control the temperature in fixed locations such as warehouses, cold stores and industrial freezers.
It is also useful for monitoring the cold chain shipments sensitive to temperature changes such as pharmaceuticals, vaccines or food. The instrument incorporates USB port and generates automatic reports in PDF or Excel datasheet.

**Application:**
- Laboratories
- Cold storage
- Cold chain
- Pharmaceuticals

| STANDARD PARAMETERS | |
|---|---|
| Measuring range: -30 to 70°C / -22 to 158°F | Scale: Celsius-Fahrenheit (°C/F ) |
| Sensor element: NTC internal sensor | |
| Response time: 11 minutes | |
| Resolution: 0.1°C / °F | |
| Accuracy: ±0.5°C / ±0.9°F (-20 to 40°C) | |
| Recording interval: Programmable from 10 seconds to 24 hours | |
| Recording time: Programmable up to 12 months (depending on Recording interval) | |
| Memory: 32.000 readings | |
| Alarm type: Simple / Cumulative | |
| Alarm range: Adjustable up to 5 alarm limits | |
| IP protection: IP67 | |
| Battery: 1x 3 volts CR2032 lithium coin cell (Replaceable) | |
| Battery life: 1 year (continuous use) | |
| Dimensions: 80x34x14mm | Weight: 25g |
| Data report: Autogenerated PDF or Excel (requires PDF reader or TempBase software) | |
| PC connection: USB connector | |
| Software: TempBase | |

| MATERIALS | |
|---|---|
| Housing: ABS plastic | Display: LCD |

Multiuse · IP67 · PDF · ENAC

## Accesories



Reference: TSN100

### External probe -40 to 90°C

This external probe with NTC sensor and range of -40 to 90°C reduces the response time of the M1 datalogger to just 30 seconds. Besides its 1-meter wire allows for distance measurements.

1m



Reference: ACB100

### Magnetic wall bracket

This support includes two magnets to adhere to metal surfaces and two screws enabling their fastening in any non-metal surface.

## Single use temperature Datalogger Tempmate® S1





Reference: Tempmate S1

Designed to preserve the integrity of the cold chain. It monitors the temperature of goods from the supplier warehouses to the customer´s.
The instrument incorporates USB port and generates automatic reports in PDF.

**Application:**
- Transport
- Cold storage
- Cold chain
- Pharmaceuticals

| STANDARD PARAMETERS | |
|---|---|
| Measuring range: -30 to 70°C / -22 to 158°F | Scale: Celsius-Fahrenheit (°C/F ) |
| Sensor element: NTC internal sensor | |
| Resolution: 0.1°C / °F | |
| Accuracy: ±0.5°C / ±0.9°F (-20 to 40°C) | |
| Recording interval: 1 minute | |
| Recording time: 10 days | |
| Memory: 16.000 readings | |
| Alarm type: Simple / Cumulative | |
| Alarm range: Adjustable up to 5 alarm limits | |
| IP protection: IP67 / NEMA 6 | |
| Battery: 1x CR2450 button cell (not replaceable) | |
| Shelf life: 2 year | |
| Dimensions: 83x47x7mm | Weight: 14.6g |
| Data report: Autogenerated PDF (requires PDF reader) | |
| PC connection: USB connector | |

| MATERIALS | |
|---|---|
| Housing: ABS plastic | Display: LED |

1 use · IP67 · PDF · HACCP



Gesa Termómetros S.L. · C/ Barrikako Bidea Pol. Ind. Igeltzera Pabellón D3 · 48610 Urduliz (Bizkaia) SPAIN

Order online at www.termometros.com
+34 94 676 63 64
info@termometros.com

# MEDIDORES DIGITALES
# COMPTEURS DIGITAUX
# DIGITAL INSTRUMENTS

## Temperatura y humedad / Termohigrómetros
## Température et humidité / Thermo-Higromètres
## Temperature and Humidity / Therma- Hygrometer

# Therma-hygrometer

Digital

## Max / Min Therma-Hygrometer

Therma-hygrometer with dual LCD screen that simultaneously displays temperature and humidity readings displayed and recorded maximum and minimum. A rear folding stand and slot allow placement in both flat surfaces and walls.



**Reference: 810-145**

| STANDARD PARAMETERS |
|---|
| Sensor element (Temperature / Humidity): Thermistor / Capacitor |
| Measuring range (Temp. / Hum.): 0 to 50°C / 10 to 99%rh |
| Scale (Temp. / Hum.): Celsius-Fahrenheit (°C/F ) / Relative humidity |
| Resolution (Temp. / Hum.): 0.1°C / 1% |
| Accuracy (Temp. / Hum.): ±1°C / ±5% |
| Battery: 1x1.5 volts AAA |
| Battery life: 10.000 hours |
| Dimensions: 20x100x110mm |
| Weight: 135g |

| MATERIALS | |
|---|---|
| Housing: ABS plastic | Display: LCD Dual |

**Application:**
- Control
- Storage
- Greenhouse
- Domestic use

MAX MIN

*Temperature only calibration

## Max / Min Therma-Hygrometer with external probe

Therma-hygrometer with dual LCD screen that simultaneously displays temperature and humidity readings displayed and recorded maximum and minimum. It also includes an external 3m cable probe. A rear folding stand and slot allow placement in both flat surfaces and walls



**Reference: 810-140**

| STANDARD PARAMETERS |
|---|
| Sensor element (Temperature / Humidity): Thermistor / Capacitor |
| Measuring range internal sensor: 0 to 50°C |
| Measuring range external probe (Temp. / Hum.): -20 to 70°C / 10 to 99%rh |
| Scale (Temp. / Hum.): Celsius-Fahrenheit (°C/F ) / Relative humidity |
| Resolution (Temp. / Hum.): 0.1°C / 1% |
| Accuracy (Temp. / Hum.): ±1°C / ±5% |
| Battery: 1x1.5 volts AAA |
| Battery life: 10.000 hours |
| Dimensions: 20x100x110mm |
| Weight: 170g |

| MATERIALS | |
|---|---|
| Housing: ABS plastic | Display: LCD Dual |

**Application:**
- Control
- Storage
- Cold chambers
- Greenhouse
- Domestic use

MAX MIN 3m

*Temperature only calibration

## Therma-Hygrometer with Max / Min & alarm functions

Therma-hygrometer with dual LCD displays the current indoor temperature and humidity. It records minimum and maximum that can activate the audible alarm. It also incorporates a foldable stand for flat surfaces and a slot for hanging on the wall. The alarm is activated when the external probe temperature goes under 0°C, this feature is ideal to warn of freeze danger in sectors such as horticulture and the like. Each unit is supplied with a probe with a 3-meter PVC wire that can be mounted onto any wall using the suction pad



**Reference: 810-155**

| STANDARD PARAMETERS |
|---|
| Sensor element (Temperature / Humidity): Thermistor / Capacitor |
| Measuring range internal sensor: 0 to 49.9°C |
| Measuring range external probe (Temp. / Hum.): -49.9 to 69.9°C / 20 to 99%rh |
| Scale (Temp. / Hum.): Celsius-Fahrenheit (°C/F ) / Relative humidity |
| Resolution (Temp. / Hum.): 0.1°C / 1% |
| Accuracy (Temp. / Hum.): ±1°C / ±5% |
| Battery: 1x1.5 volts AAA |
| Battery life: 10.000 hours |
| Dimensions: 20x65x97mm |
| Weight: 78g |

| MATERIALS | |
|---|---|
| Housing: ABS plastic | Display: LCD Dual |

**Application:**
- Control
- Storage
- Cold chambers
- Greenhouse
- Domestic use

MAX MIN 1m

*Temperature only calibration



Gesa Termómetros S.L. · C/ Barrikako Bidea Pol. Ind. Igeltzera Pabellón D3 · 48610 Urduliz (Bizkaia) SPAIN

Order online at www.termometros.com
+34 94 676 63 64
info@termometros.com

# Digital

## Therma-hygrometer

### Max / Min Therma-Hygrometer for panel mounting

Therma-hygrometer with dual LCD display ideal for OEMs for installing into equipment, i.e. vivariums, egg hatcheries and similar. The instrument can be panel mounted via a minimum Ø33mm cutout, it incorporates a screw clamp with a maximum panel thickness of 7 mm.



**Reference: 810-180**

| STANDARD PARAMETERS |
|---|
| Sensor element (Temperature / Humidity): / Capacitor |
| Measuring range (Temp. / Hum.): 0 to 49.9°C / 20 to 99%rh |
| Scale (Temp. / Hum.): Celsius-Fahrenheit (°C/F ) / Relative humidity |
| Resolution (Temp. / Hum.): 0.1°C / 1% |
| Accuracy (Temp. / Hum.): ±1°C / ±5% |
| Battery: 1x 3 volts CR2032 lithium coin cell |
| Battery life: 5.000 hours |
| Dimensions: Ø50x41mm |
| Weight: 42g |

| MATERIALS | |
|---|---|
| Housing: ABS plastic | Display: LCD Dual |

**Application:**
- Control
- Storage
- Greenhouse
- Vivarium
- Egg hatcheries

MAX MIN

*Temperature only calibration

### Pen-shaped pocket therma-hygrometer

Easy to use pocket digital therma-hygrometer with dual LCD display that shows temperature and humidity readings simultaneously.
It also records minimum and maximum temperautures.
The instrument incorporates a clip on the back to hold it in any position.



**Reference: 810-190**

| STANDARD PARAMETERS |
|---|
| Sensor element (Temperature / Humidity): Silicone bandgap / Capacitor |
| Measuring range (Temp. / Hum.): 0 to 49.9°C / 20 to 95%rh |
| Scale (Temp. / Hum.): Celsius-Fahrenheit (°C/F ) / Relative humidity |
| Resolution (Temp. / Hum.): 0.1°C / 1% |
| Accuracy (Temp. / Hum.): ±1°C / ±5% |
| Battery: 1x1.5 volts AAA |
| Battery life: 6.000 hours |
| Dimensions: 20x23x138mm |
| Weight: 35g |

| MATERIALS | |
|---|---|
| Housing: ABS plastic | Display: LCD Dual |

**Application:**
- Control
- Storage
- Greenhouse

MAX MIN

*Temperature only calibration

### Therma-Hygrometer with Max / Min & alarm functions

Digital therma-hygrometer with dual LCD screen that simultaneously displays temperature and humidity readings. It records and displays maximum and minimum temperatures. It also includes an external probe with a 3 meter cable. The alarm is activated when the external probe temperature goes under 0°C, this feature is ideal to warn of freeze danger in sectors such as horticulture and the like.
A rear folding stand allows for placement on flat surfaces.



**Reference: 810-195**

| STANDARD PARAMETERS |
|---|
| Sensor element (Temperature / Humidity): Silicone bandgap / Capacitor |
| Measuring range internal sensor: 0 to 49.9 °C |
| Measuring range external probe (Temp. / Hum.): -49.9 to 69.9°C / 20 to 98%rh |
| Scale (Temp. / Hum.): Celsius-Fahrenheit (°C/F ) / Relative humidity |
| Resolution (Temp. / Hum.): 0.1°C / 1% |
| Accuracy (Temp. / Hum.): ±1°C / ±5% |
| Battery: 1x1.5 volts AAA |
| Battery life: 10.000 hours |
| Dimensions: 18x41x76mm |
| Weight: 85g |

| MATERIALS | |
|---|---|
| Housing: ABS plastic | Display: LCD Dual |

**Application:**
- Control
- Storage
- Greenhouse

MAX MIN

*Temperature only calibration



Gesa Termómetros S.L. · C/ Barrikako Bidea Pol. Ind. Igeltzera Pabellón D3 · 48610 Urduliz (Bizkaia) SPAIN

Order online at www.termometros.com
+34 94 676 63 64
info@termometros.com

# MEDIDORES DIGITALES
# COMPTEURS DIGITAUX
# DIGITAL INSTRUMENTS

## Termómetros infrarrojos
## Thermomètres Infrarouges
## Infrared Thermometers

# Infrared Thermometers

## Infrared thermometer up to 380°C

Easy-to-use trigger thermometer, for temperature measurements in hazardous or inaccessible areas such as motors, electrical connections, kitchen surfaces and many other applications.



**Reference: IT-380C**

**Application:**
- Laboratories
- Industrial

| STANDARD PARAMETERS | |
|---|---|
| Measuring range: -50 to 380°C | Scale: Celsius-Fahrenheit (°C/F ) |
| Emissivity: 0.95 | Field of view: 12:1 |
| Resolution: 0.1°C | Working conditions: 0 to 40°C/ 10 to 95% HR |
| Battery: 1x 9 volts PP3 alkaline | Battery life: 2 years |
| Dimensions: 153x100x43mm | Weight: 148g |
| Accuracy: ±1.5°C ( 0 to 380°C ) ±3°C ( -50 to 0°C ) | |

| MATERIALS | |
|---|---|
| Housing: Plastic | Display: LCD 9mm |

ENAC · Hold · Auto OFF

## Infrared thermometer up to 550°C

Easy-to-use trigger thermometer, for temperature measurements in hazardous or inaccessible areas such as motors, electrical connections, kitchen surfaces and many other applications.



**Reference: IT-550C**

**Application:**
- Laboratories
- Industrial furnaces
- Foundry

| STANDARD PARAMETERS | |
|---|---|
| Measuring range: -50 to 500°C | Scale: Celsius-Fahrenheit (°C/F ) |
| Emissivity: 0.95 | Field of view: 12:1 |
| Resolution: 0.1°C | Working conditions: 0 to 40°C/ 10 to 95% HR |
| Battery: 1x 9 volts PP3 alkaline | Battery life: 2 years |
| Dimensions: 153x100x43mm | Weight: 148g |
| Accuracy: ±1.5°C ( 0 to 500°C ) ±3°C ( -50 to 0°C ) | |

| MATERIALS | |
|---|---|
| Housing: Plastic | Display: LCD 9mm |

ENAC · Hold · Auto OFF

## Infrared thermometer up to 900°C

High range easy-to-use trigger thermometer, for temperature measurements in hazardous or inaccessible areas such as motors, electrical connections, kitchen surfaces and many other applications.



**Reference: IT-900C**

**Application:**
- Laboratories
- Industrial furnaces
- Foundry

| STANDARD PARAMETERS | |
|---|---|
| Measuring range: -50 to 900°C | Scale: Celsius-Fahrenheit (°C/F ) |
| Emissivity: 0.95 | Field of view: 12:1 |
| Resolution: 0.1°C | Working conditions: 0 to 40°C/ 10 to 95% HR |
| Battery: 1x 9 volts PP3 alkaline | Battery life: 2 years |
| Dimensions: 175x100x49mm | Weight: 220g |
| Accuracy: ±1.5°C ( 0 to 900°C ) ±3°C ( -50 to 0°C ) | |

| MATERIALS | |
|---|---|
| Housing: Plastic | Display: LCD 9mm |

MAX MIN · ENAC · Hold · Auto OFF

## Infrared thermometer up to 2200°C

High range easy-to-use trigger thermometer, for temperature measurements in hazardous or inaccessible areas such as motors, electrical connections. It includes power cord for long-term measurements. Wire connection to computer and software also included.



**Reference: IT-2200C**

**Application:**
- Laboratories
- Industrial furnaces
- Foundry

| STANDARD PARAMETERS | |
|---|---|
| Measuring range: 200 to 2200°C | Scale: Celsius-Fahrenheit (°C/F ) |
| Emissivity: Adjustable from 0.1 to 1 | Field of view: 80:1 |
| Resolution: 0.1°C | Working conditions: 0 to 40°C/ 10 to 80% HR |
| Battery: 1x 9 volts PP3 alkaline | Battery life: 3 years |
| Dimensions: 220x134x60mm | Weight: 480g |
| Accuracy: ±2°C ( 200 to 450°C ) ±3°C ( 450 to 1100°C ) ±4°C other | |

| MATERIALS | |
|---|---|
| Housing: Plastic | Display: LCD 9mm |

MAX MIN · ENAC · Hold · Auto OFF



Gesa Termómetros S.L. · C/ Barrikako Bidea Pol. Ind. Igeltzera Pabellón D3 · 48610 Urduliz (Bizkaia) SPAIN

Order online at www.termometros.com
+34 94 676 63 64
info@termometros.com

# Infrared Thermometers



## Raytemp 3 Infrared thermometer

Compact, lightweight and easy to use. Ideal for measuring temperatures while avoiding the need for contact. The backlit display shows the maximum temperature, it turns off after 15 seconds, maximizing battery life.

**Application:**
- Laboratories
- Industrial
- Catering

**Reference: 814-040**

| STANDARD PARAMETERS | |
|---|---|
| Measuring range: -60 to 500°C | Scale: Celsius-Fahrenheit (°C/F ) |
| Emissivity: 0.97 | Field of view: 12:1 |
| Resolution: 0.1°C (-9.9 to 199.9°C) or 1°C | Working conditions: 0 to 40°C/ 10 to 95% HR |
| Battery: 2x 1.5 volts AAA | Battery life: 140 hours (continuous use) |
| Dimensions: 40x66x155mm | Weight: 180g |
| Accuracy: ±1°C (0 to 65°C) other ±2% or ±2°C highest value | |

| MATERIALS | |
|---|---|
| Housing: ABS plastic | Display: LCD 9mm |

Auto OFF



## Raytemp 8 Infrared thermometer

Compact, lightweight and easy to use. Includes plug for type K thermocouple probes. It calculates the difference between minimum and maximum temperature and also the average. The backlit display turns off after 60 seconds, maximizing battery life.

**Application:**
- Laboratories
- Industrial
- Catering

**Reference: 814-045**

| STANDARD PARAMETERS | |
|---|---|
| Measuring range infrared: -60 to 500°C | Scale: Celsius-Fahrenheit (°C/F ) |
| Measuring range probe: -64 to 1370°C (probe not included) | |
| Accuracy IR: ±2°C or ±2% highest value | Accuracy probe: ±1°C or ±1% highest value |
| Emissivity: Adjustable from 0.1 to 1 | Field of view: 12:1 |
| Resolution: 0.1°C (-9.9 to 199.9°C) or 1°C | Working conditions: 0 to 40°C/ 10 to 95% HR |
| Battery: 2x 1.5 volts AAA | Battery life: 180 hours (continuous use) |
| Dimensions: 40x66x155mm | Weight: 185g |

| MATERIALS | |
|---|---|
| Housing: ABS plastic | Display: LCD 9mm |

MED · Dif. · MAX MIN · Auto OFF



## Raytemp 38 Infrared thermometer

Professional instrument to measure small areas at large distances. With dual laser pointer for increased accuracy. The audible alarm can use programmable temperature monitorings. The backlit display shows maximum and minimum temperatures, difference between the two and average temperature; it turns off after 60 seconds, maximizing battery life.

**Application:**
- Laboratories
- Industrial
- Catering

**Reference: 814-038**

| STANDARD PARAMETERS | |
|---|---|
| Measuring range: -59.9 to 999.9°C | Scale: Celsius-Fahrenheit (°C/F ) |
| Measuring range probe: -64 to 1370°C (probe not included) | |
| Accuracy IR: ±2°C or ±2% highest value | Accuracy probe: ±1°C or ±1% highest value |
| Emissivity: Adjustable from 0.1 to 1 | Field of view: 50:1 |
| Resolution: 0.1°C | Working conditions: 0 to 40°C/ 10 to 95% HR |
| Battery: 2x 1.5 volts AAA | Battery life: 180 hours (continuous use) |
| Dimensions: 47x170x240mm | Weight: 395g |

| MATERIALS | |
|---|---|
| Housing: ABS plastic | Display: LCD 9mm |

MED · Dif. · MAX MIN · Auto OFF



## Magnetic bracket for Raytemp 38

The magnetic support allows fastening instrument in any position on metal surfaces.

**Reference: 814-050**



Gesa Termómetros S.L. · C/ Barrikako Bidea Pol. Ind. Igeltzera Pabellón D3 · 48610 Urduliz (Bizkaia) SPAIN

Order online at www.termometros.com
+34 94 676 63 64
info@termometros.com

# MEDIDORES DIGITALES
# COMPTEURS DIGITAUX
# DIGITAL INSTRUMENTS

## Termómetros digitales
## Thermomètres numériques
## Digital thermometers

Digital

# Max / Min Thermometers

## Max / Min Thermometer

Thermometer digital room with large screen that simultaneously displays current temperature, maximum and minimum. Its design makes it ideal to place on all surfaces and in extreme environmental conditions.




**Reference: 810-100**

| STANDARD PARAMETERS |
|---|
| Sensor element: Thermistor |
| Measuring range: -49.9 to 69.9°C |
| Scale: Celsius-Fahrenheit (°C/F ) |
| Resolution: 0.1°C |
| Accuracy: ±1°C |
| Battery: 1x 1.5 volts AAA |
| Battery life: 4.000 hours |
| Dimensions: 30x50x180mm |
| Weight: 92g |

| MATERIALS |
|---|
| Housing: ABS plastic |
| Display: LCD |

**Application:**
- Cold chambers
- Storage
- Greenhouse
- Domestic use

MAX MIN

## Alarm Max / Min Thermometer with external probe

The thermometer features a large LCD display, max/min memory function to record the highest and lowest temperatures and an audible alarm. The unit incorporates two temperature sensors, a remote water resistant probe with one metre PVC lead for the appliance temperature and an internal sensor for the room temperature. The remote probe can be mounted onto the fridge internal wall using the suction pad or mounting bracket supplied.




**Reference: 810-225**

| STANDARD PARAMETERS |
|---|
| Sensor element: Thermistor |
| Measuring range: -49.9 to 69.9°C |
| Scale: Celsius-Fahrenheit (°C/F ) |
| Resolution: 0.1°C |
| Accuracy: ±1°C |
| Battery: 1x 3 volts CR2032 lithium coin cell |
| Battery life: 3.000 hours |
| Dimensions: 16x50x82mm |
| Weight: 50g |

| MATERIALS |
|---|
| Housing: ABS plastic |
| Display: LCD |

**Application:**
- Cold chambers
- Fridges
- Freezers

MAX MIN · 1m

## Alarm Max / Min Thermometer with external probe

The thermometer features a large LCD display, max/min memory function to record the highest and lowest temperatures and an audible alarm. The unit incorporates two temperature sensors, a remote water resistant probe with one metre PVC lead for the appliance temperature and an internal sensor for the room temperature. The remote probe can be mounted onto the fridge internal wall using the suction pad or mounting bracket supplied.




**Reference: 810-210**

| STANDARD PARAMETERS |
|---|
| Sensor element: Thermistor |
| Measuring range: -49.9 to 69.9°C |
| Scale: Celsius-Fahrenheit (°C/F ) |
| Resolution: 0.1°C |
| Accuracy: ±1°C |
| Battery: 1x 1.5 volts AAA |
| Battery life: 5.000 hours |
| Dimensions: 15x52x73mm |
| Weight: 48g |

| MATERIALS |
|---|
| Housing: ABS plastic |
| Display: LCD |

**Application:**
- Cold chambers
- Fridges
- Freezers

MAX MIN · 1m



Gesa Termómetros S.L. · C/ Barrikako Bidea Pol. Ind. Igeltzera Pabellón D3 · 48610 Urduliz (Bizkaia) SPAIN

Order online at www.termometros.com
+34 94 676 63 64
info@termometros.com

# Foldable probe catering thermometers

Digital



## SuperFast Thermapen® 3

The SuperFast Thermapen 3 thermometer incorporates a large digital display with a precise read-out of temperature. The resolution can be switched to 1 °C, if required, via a switch in the battery compartment. The thermometer will power off automatically after ten minutes, maximising battery life. This feature can be disabled if not required. The SuperFast Thermapen® 3 thermometer incorporates a reduced tip, stainless steel, food penetration probe that conveniently folds back through 180 degrees into the side of the instrument when not in use.
The response time of any thermometer is dependant on many factors; the mass of the sensing tip, heat transfer and, most importantly, the state of the substance being measured. Tests show that the response time of this instrument is just 3 seconds.

**Application:**
· Catering

| STANDARD PARAMETERS | |
|---|---|
| Sensor element: K type thermocouple | |
| Measuring range: -49.9 to 299.9°C | |
| Scale: Celsius-Fahrenheit (°C/F ) | |
| Resolution: 0.1 or 1°C (programmable) | |
| Accuracy: ±0.4°C (-49.9 y 199.9 ) other ±1° | |
| Battery: 2 x 3 volts CR2032 lithium coin cell | |
| Battery life: 1.500 hours | |
| Dimensions: 19x47x153mm | Probe dimension: Ø3.3x115mm |
| Weight: 97g | |

| MATERIALS |
|---|
| Housing: Plastic with Biomaster |
| Display: 14.3mm LCD |

**Reference:**
- 231-217
- 231-227
- 231-237
- 231-247
- 231-257

Biomaster protection · Auto OFF · HACCP · ENAC

---



## SuperFast Thermapen® 4

The patented 360° self-rotating display can be used in any position, in either hand and is truly ambidextrous. The Thermapen 4 incorporates an intelligent backlit display sensing light levels, automatically turning the backlight on/off in varying light conditions. The motion-sensing sleep mode automatically turns the Thermapen 4 on/off when set down or picked up, maximising battery life. Measuring temperature over the range of -49.9 to 299.9 °C and used by hundreds of thousands of discerning cooks worldwide, it offers a combination of speed, accuracy and convenience of use.
The response time of any thermometer is dependant on many factors; the mass of the sensing tip, heat transfer and, most importantly, the state of the substance being measured. Tests show that the response time of this instrument is just 3 seconds.

**Application:**
· Catering

| STANDARD PARAMETERS | |
|---|---|
| Sensor element: K type thermocouple | |
| Measuring range: -49.9 to 299.9°C | |
| Scale: Celsius-Fahrenheit (°C/F ) | |
| Resolution: 0.1 or 1°C (programmable) | |
| Accuracy: ±0.4°C (-49.9 y 199.9 ) other ±1° | |
| Battery: 1x 1.5volts AAA | |
| Battery life: 3.000 hours | |
| Dimensions: 19x50x157mm | Probe dimension: Ø3.3x115mm |
| Weight: 120g | |

| MATERIALS |
|---|
| Housing: Plastic with Biomaster |
| Display: 15mm LCD horizontal / 11mm LCD vertical |

**Reference:**
- 234-417
- 231-427
- 234-437
- 234-447
- 234-457
- 234-407
- 234-477
- 234-487
- 234-497
- 234-507

IP66/67 · 360 · Biomaster protection · Auto OFF · HACCP · ENAC

# Industrial thermometers with replaceable probe

## Industrial thermometer THERMA 1



Reference: 221-041

Durable and easy to use instrument with a large LCD screen for easy reading. It can be combined with a wide variety thermocouple probe type K making it a versatile tool suitable for use in many industrial applications.

| STANDARD PARAMETERS | |
|---|---|
| Sensor element: K type thermocouple | |
| Measuring range: -99.9 to 1372°C | |
| Scale: Celsius-Fahrenheit (°C/F ) | |
| Resolution: 0.1°C (-99.9 to 299.9°C) / 1°C (300 to 1372°C) | |
| Accuracy: ±0.4°C ±0.1% | |
| Battery: 3x 1.5 volts AAA | |
| Battery life: 10.000 hours | |
| Dimensions: 25x56x128mm | Probe dimension: Probe not included |
| Weight: 130g | |

| MATERIALS |
|---|
| Housing: ABS plastic with Biomaster |
| Display: LCD 12mm |

**Application:**
·Industrial

Hold · Auto OFF · HACCP · ENAC · Biomaster protection

## Industrial thermometer THERMA 3



Reference: 221-043

Durable and easy to use instrument with a large LCD screen for easy reading. It can be combined with a wide variety thermocouple probe type K making it a versatile tool suitable for use in many industrial applications.

| STANDARD PARAMETERS | |
|---|---|
| Sensor element: K type thermocouple | |
| Measuring range: -100 to 1372°C | |
| Scale: Celsius-Fahrenheit (°C/F ) | |
| Resolution: 1°C | |
| Accuracy: ±1°C ±0.1% | |
| Battery: 3x 1.5 volts AAA | |
| Battery life: 10.000 hours | |
| Dimensions: 25x56x128mm | Probe dimension: Probe not included |
| Weight: 130g | |

| MATERIALS |
|---|
| Housing: ABS plastic with Biomaster |
| Display: LCD 12mm |

**Application:**
·Industrial

Hold · Auto OFF · HACCP · ENAC · Biomaster protection

## Industrial thermometer THERMA ELITE



Reference: 221-061

This instrument incorporates all the features of Therma 1 and 3 along with backlit display, max/min memory function and a mode switch button for selecting resolution (0.1-1) or scale (°C/°F).

The thermometer also incorporates a calibration adjustment function (± 2°C), which allows users to compensate for thermocouple probe errors.

| STANDARD PARAMETERS | |
|---|---|
| Sensor element: K type thermocouple | |
| Measuring range: -99.9 to 1372°C | |
| Scale: Celsius-Fahrenheit (°C/F ) | |
| Resolution: 0.1°C (-99.9 to 299.9°C) / 1°C (300 to 1372°C) | |
| Accuracy: ±0.4°C ±0.1% | |
| Battery: 3x 1.5 volts AAA | |
| Battery life: 10.000 hours | |
| Dimensions: 25x56x128mm | Probe dimension: Probe not included |
| Weight: 130g | |

| MATERIALS |
|---|
| Housing: ABS plastic with Biomaster |
| Display: LCD 12mm |

**Application:**
·Industrial

MAX MIN · Hold · Auto OFF · HACCP · ENAC · Biomaster protection



Gesa Termómetros S.L. · C/ Barrikako Bidea Pol. Ind. Igeltzera Pabellón D3 · 48610 Urduliz (Bizkaia) SPAIN

Order online at www.termometros.com
+34 94 676 63 64
info@termometros.com

# Industrial thermometers



## Waterproof thermometer with replaceable probe THERMA PLUS

The thermometer is housed in a robust extruded aluminium waterproof case with a white anti-bacterial/salt resistant powder coated finish. The Therma Plus incorporates the latest microprocessor technology with improved durability, designed for reliability and ease of use in routine food processing and industrial applications.

**Application:**
- Laboratories
- Industrial

| STANDARD PARAMETERS | | |
|---|---|---|
| Sensor element: K type thermocouple | | |
| Measuring range: -99.9 to 1372°C | | |
| Scale: Celsius (°C ) | | |
| Resolution: 0.1 / 1°C auto-ranging @ 299.9°C | | |
| Accuracy: ±0.4°C ±0.1% of reading | | |
| Battery: 1x 9 volts PP3 alkaline | | |
| Battery life: 5.000 hours | | |
| Dimensions: 35x60x115mm | Probe dimension: Probe not included | |
| Weight: 194g | | |

| MATERIALS | |
|---|---|
| Housing: Extruded aluminum | |
| Display: LCD | |

IP66/67 · Hold · Auto OFF · HACCP · ENAC

**Reference:**
- 221-071
- 221-271
- 221-371
- 221-471
- 221-571



## Waterproof thermometer with fixed probe CATERTEMP PLUS

The thermometer is housed in a robust extruded aluminium waterproof case with a white anti-bacterial/salt resistant powder coated finish. The Catertemp Plus incorporates the latest microprocessor technology with improved durability, designed for reliability and ease of use in routine food processing and industrial applications.

**Application:**
- Laboratories
- Industrial

| STANDARD PARAMETERS | | |
|---|---|---|
| Sensor element: K type thermocouple | | |
| Measuring range: -49.9 to 299.9°C | | |
| Scale: Celsius (°C ) | | |
| Resolution: 0.1°C | | |
| Accuracy: ±0.4°C ±1 digit | | |
| Battery: 1x 9 volts PP3 alkaline | | |
| Battery life: 5.000 hours | | |
| Dimensions: 35x60x115mm | Probe dimension: Ø3.3x130mm | Wire: 1m coiled |
| Weight: 244g | | |

| MATERIALS | |
|---|---|
| Housing: Extruded aluminum | Wire: Polyurethane |
| Display: LCD | |

IP66/67 · 1m · Hold · Auto OFF · MAX MIN · ENAC

**Reference:**
- 221-056
- 221-256
- 221-356
- 221-456
- 221-556



## Catering thermometer with fixed probe THERMACHECK

Designed specifically for use in food processing industries and catering. Meets food handling standards and a high system. It includes a fixed stainless steel probe and a 1m polyurethane cable.

**Application:**
- Catering

| STANDARD PARAMETERS | | |
|---|---|---|
| Sensor element: Thermistor | | |
| Measuring range: -39.9 to 149.9°C | | |
| Scale: Celsius (°C ) | | |
| Resolution: 0.1°C | | |
| Accuracy: ±0.4°C (-20 to 70°C ) | | |
| Battery: 3x 1.5 volts AAA | | |
| Battery life: 20.000 hours | | |
| Dimensions: 25x56x128mm | Probe dimension: Ø3.3x130mm | Wire: 1m coiled |
| Weight: 220g | | |

| MATERIALS | |
|---|---|
| Housing: ABS plastic with Biomaster | Wire: Polyurethane |
| Display: LCD 12mm | |

HACCP · 1m · Biomaster protection · Hold · Auto OFF · MAX MIN · ENAC

**Reference: 226-042**



Gesa Termómetros S.L. · C/ Barrikako Bidea Pol. Ind. Igeltzera Pabellón D3 · 48610 Urduliz (Bizkaia) SPAIN

Order online at www.termometros.com
+34 94 676 63 64
info@termometros.com

## Metrology Laboratory| Calibration certificates

The calibration certificate is a document that shows the differences in measurement between the instrument to be calibrated (measurand) and the standard against which it is contrasted. This document must include the uncertainty of the measurand at each calibrated point.

In the Calibration Laboratory of Gesa Termómetros, S. L. we calibrate both our instruments and those manufactured in other companies.

These are factory certificates that include the following information:

- Points to be calibrated (usually chosen by the client)
- Differences between the measurements shown by the instrument to be calibrated (measurand) and the Gesa standards against which they are contrasted.
- Uncertainties of measurement of each contrasted point.



**A) Calibrated instruments:**

The list of calibrated instruments in Gesa is very broad. Before sending your equipment or instrument to calibrate our facilities, please contact us to make sure that your instrument can be calibrated. The limitations may be due to:

Equipment resolutions or precisions superior to those that the Gesa patterns can face. As a rule, the patterns must be an order of magnitude superior in precision and resolution to those of the instruments to be calibrated. (see section e) "Equipment used in the calibrations and patterns of Gesa" to check the characteristics of the Gesa standards)

Physical dimensions or construction of the instrument.
State of the instrument. It may be necessary to repair the instrument before recalibrating it. For this it will be necessary to make a previous economic budget. We perform calibrations in the following areas:

Gesa Termómetros, S.L.

Polígono Industrial Igeltzera
Pabellón D3
48610 Urduliz
Vizcaya, Spain




Distributed by:

info@termometros.com
www.termometros.com

Tel: +34 946 76 63 64